National Aeronautics and
Space Administration

August 2006

# Draft Environmental Impact Statement for the Mars Science Laboratory Mission

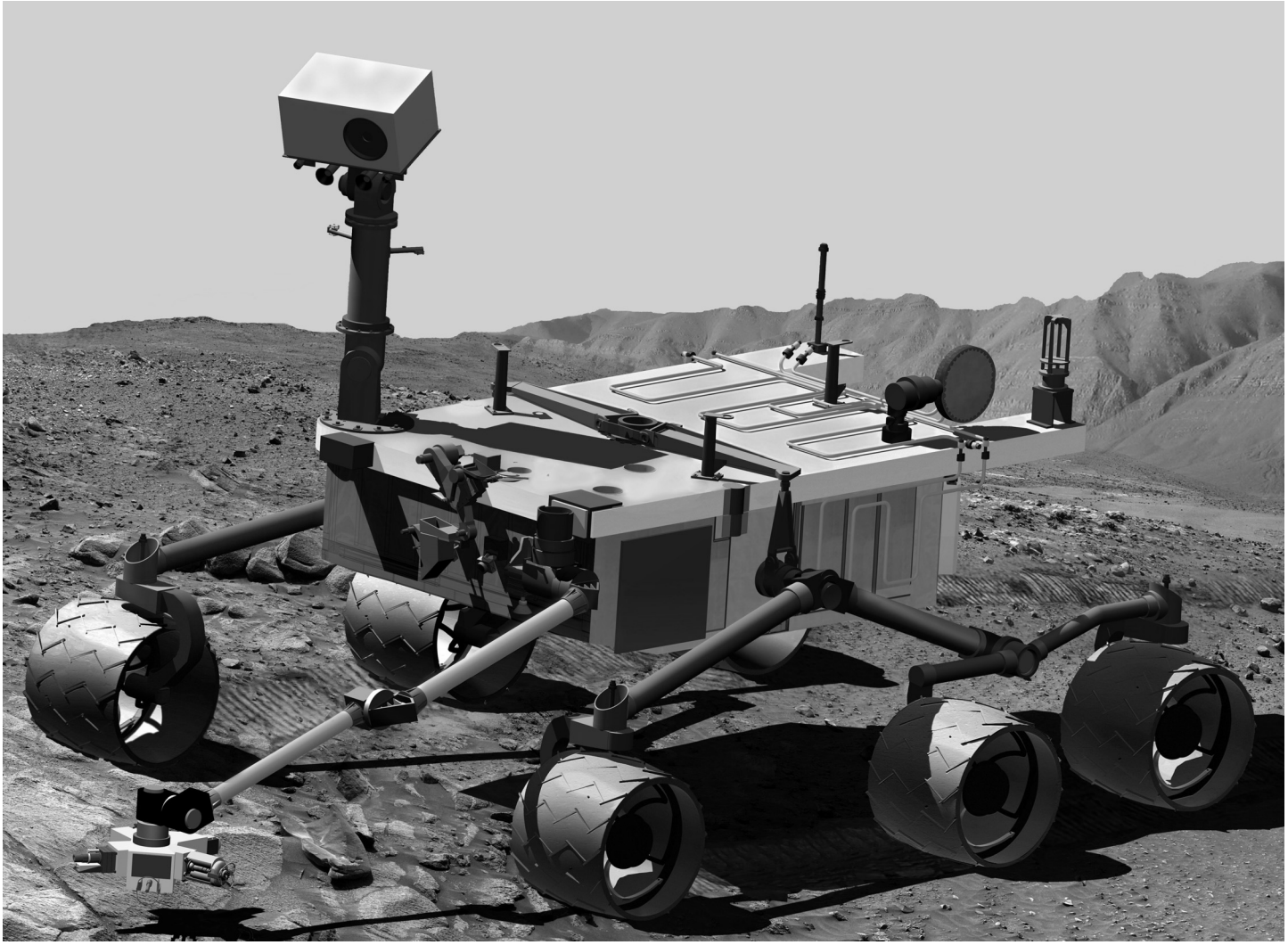

**Cover graphic: artist's concept of the Mars Science Laboratory Rover operating on the surface of Mars. NASA/JPL**

# DRAFT ENVIRONMENTAL IMPACT STATEMENT FOR THE MARS SCIENCE LABORATORY MISSION

**Science Mission Directorate**
**National Aeronautics and Space Administration**
**Washington, DC  20546**

**August 2006**

This page intentionally left blank.

# DRAFT ENVIRONMENTAL IMPACT STATEMENT FOR THE MARS SCIENCE LABORATORY MISSION

## ABSTRACT


| | |
|---|---|
| LEAD AGENCY: | National Aeronautics and Space Administration<br>Washington, DC 20546 |
| COOPERATING AGENCY: | U.S. Department of Energy<br>Washington, DC 20585 |
| POINT OF CONTACT FOR INFORMATION: | Mark R. Dahl<br>Planetary Science Division<br>Science Mission Directorate<br>NASA Headquarters<br>Washington, DC 20546<br>(202) 358-4800 |
| DATE: | August 2006 |



This Draft Environmental Impact Statement (DEIS) has been prepared by the National Aeronautics and Space Administration (NASA) in accordance with the National Environmental Policy Act of 1969, as amended, (NEPA) to assist in the decision-making process for the Mars Science Laboratory (MSL) mission. This Environmental Impact Statement (EIS) is a tiered document (Tier 2 EIS) under NASA's Programmatic EIS for the Mars Exploration Program.

The Proposed Action addressed in this DEIS is to continue preparations for and implement the MSL mission. The MSL spacecraft would be launched on an expendable launch vehicle during September – November 2009. The MSL spacecraft would then deliver a large, mobile science laboratory (rover) with advanced instrumentation to a scientifically interesting location on the surface of Mars in 2010. The scientific goals of the MSL mission include assessing the biological potential of at least one selected site on Mars, characterizing the geology and geochemistry of the landing region at all appropriate spatial scales, investigating planetary processes of relevance to past habitability, and characterizing the broad spectrum of the Martian surface radiation environment. The MSL mission would also fulfill NASA's strategic technology goals of increasing the mass of science payloads delivered to the surface of Mars, expanding access to higher and lower latitudes, increasing precision landing capability, and increasing traverse capability to distances on the order of several kilometers.

This DEIS presents descriptions of the proposed MSL mission, spacecraft, and candidate launch vehicle; an overview of the affected environment at and near the launch site; and the potential environmental consequences associated with the Proposed Action and alternatives, including the No Action Alternative.

This page intentionally left blank.

# EXECUTIVE SUMMARY

This Draft Environmental Impact Statement (DEIS) for the Mars Science Laboratory (MSL) mission has been prepared in accordance with the National Environmental Policy Act of 1969, as amended, (NEPA) (42 U.S.C. 4321 *et seq.*); Executive Order 12114, *Environmental Effects Abroad of Major Federal Actions*; the Council on Environmental Quality Regulations for Implementing the Procedural Provisions of NEPA (40 CFR parts 1500-1508); and the National Aeronautics and Space Administration's (NASA's) NEPA policy and procedures (14 CFR subpart 1216.3).

On April 12, 2005, NASA published the *Final Programmatic Environmental Impact Statement for the Mars Exploration Program* (the Tier 1 EIS) (NASA 2005a, 70 FR 19102). The Record of Decision for the Mars Exploration Program (MEP) was rendered by NASA enabling continued planning for the Program, which represents NASA's overall plans for the robotic exploration of Mars through 2020. This Environmental Impact Statement (EIS) for the MSL mission is a tiered document (Tier 2 EIS) under the Mars Exploration Program.

The purpose of this DEIS is to assist in the decision-making process concerning the Proposed Action and Alternatives, including the No Action Alternative, for the proposed MSL mission, planned for launch in 2009.

## PURPOSE AND NEED FOR ACTION

The MEP is currently being implemented as a sustained series of flight missions to Mars, each of which will provide important, focused scientific return. The MEP is fundamentally a science driven program whose focus is on understanding and characterizing Mars as a dynamic system and ultimately addressing whether life is or was ever a part of that system through a strategy referred to as "*follow the water*". The core MEP addresses the highest priority scientific investigations directly related to the Program goals and objectives. Additionally, technology developments and improvements over the course of the MEP program are expected to enable a progressive increase in the payload mass and capability delivered to Mars by program spacecraft, enhance the capability to safely and precisely place payloads at any desired location on the surface, and enable full access to the surface, subsurface and atmospheric regions.

The purpose of the MSL mission is to both conduct comprehensive science on the surface of Mars and demonstrate technological advancements in the exploration of Mars. MSL investigations would be a means of addressing several of the high-priority scientific investigations recommended to NASA by the planetary science community. The overall scientific goal of the proposed MSL mission can be divided into four areas: 1) assess the biological potential of at least one selected site on Mars, 2) characterize the geology and geochemistry of the landing region at all appropriate spatial scales, 3) investigate planetary processes of relevance to past habitability, and 4) characterize the broad spectrum of the Martian surface radiation environment.

The proposed MSL mission, with it's planned capability to "*follow the water*" from a potential landing site within a broad range of latitudes, would utilize a mobile science laboratory (rover) with advanced instrumentation to acquire significant, detailed information regarding the habitability of Mars from a scientifically promising location. The proposed MSL mission would also fulfill NASA's strategic technology goals of increasing the mass of science payloads delivered to the surface of Mars, expanding access to higher and lower latitudes, increasing precision landing capability, and increasing traverse capability to distances on the order of several kilometers.

## ALTERNATIVES EVALUATED

This DEIS for the MSL mission evaluates the following alternatives.

- Proposed Action (Alternative 1)—NASA proposes to continue preparations for and implement the MSL mission to Mars. The proposed MSL spacecraft would be launched on board an expendable launch vehicle from Cape Canaveral Air Force Station (CCAFS), Florida, during September – November 2009, and would be inserted into a trajectory toward Mars. The proposed MSL rover would utilize a radioisotope power system as its primary source of electrical power to operate and conduct science on the surface of Mars. The next launch opportunity for a landed mission to Mars would occur during November – December 2011.
- Alternative 2—Under this alternative, NASA would discontinue preparations for the Proposed Action (Alternative 1) and implement an alternative MSL mission to Mars. The alternative MSL spacecraft would be launched on board an expendable launch vehicle from CCAFS, Florida, during September – November 2009, and would be inserted into a trajectory toward Mars. The alternative MSL rover would utilize solar energy as its primary source of electrical power to operate and conduct science on the surface of Mars. The next launch opportunity for a landed mission to Mars would occur during November – December 2011.
- No Action Alternative—Under this alternative, NASA would discontinue preparations for the MSL mission and the spacecraft would not be launched.

## SCIENCE COMPARISON

ALTERNATIVES 1 AND 2. The MSL rover designs in both the Proposed Action (Alternative 1) and Alternative 2 would carry the same science instruments and hence either alternative would have common mission science objectives. The main difference between these two alternatives is that the proposed radioisotope-powered rover would be capable of landing and operating within a significantly broader range of latitudes on Mars than would the solar-powered rover. The capability to land the rover within a broad range of latitudes is important because doing so maintains NASA's flexibility to select the most scientifically interesting location on the surface and maximize the rover's capability to collect surface samples and conduct comprehensive science experiments. The radioisotope-powered rover would be capable of operating for at least one Mars year and accomplish all of the MSL mission's science objectives at a landing site on Mars, yet to be selected, between 60° South and 60° North latitude. Only at 15° North

latitude could a solar-powered rover operate for a full Mars year and accomplish the mission's science objectives. Such a rover could accomplish the minimum science objectives over a latitude range of approximately 5° North to 20° North.

NO ACTION ALTERNATIVE. Under the No Action Alternative, the next step in NASA's MEP following the Mars Reconnaissance Orbiter mission (for which the spacecraft recently arrived at Mars) and the planned Phoenix Lander mission in 2007, would not be conducted as currently envisioned. NASA would need to reevaluate its programmatic options for the 2009 launch opportunity to Mars and beyond.

## ENVIRONMENTAL IMPACTS OF THE PROPOSED ACTION AND THE ALTERNATIVES

For the proposed MSL mission, the potentially affected environment would include the areas on or near the vicinity of the launch site at CCAFS in Florida, and the global environment. The potential environmental consequences of expendable launch vehicles have been addressed in prior U.S. Air Force (USAF) and NASA environmental documents, and are summarized below.

The evaluations presented in this DEIS, based on representative configurations of Atlas V and Delta IV launch vehicles, were completed prior to NASA's selection of the Atlas V 541 configuration as the launch vehicle for the MSL mission. NASA considers these evaluations to adequately bound the potential environmental consequences of the alternatives described in this DEIS. NASA will continue its analysis of the alternatives and may update the evaluations with information specific to the Atlas V 541 launch vehicle in the Final EIS.

### Environmental Impacts of the Mission

ALTERNATIVES 1 AND 2. The environmental impacts associated with successfully implementing either the Proposed Action (Alternative 1) or Alternative 2 would be associated principally with the exhaust emissions from the launch vehicle. These effects would include short-term impacts on air quality from the exhaust cloud at and near the launch pad, and short-term acidic deposition on the vegetation and surface water bodies at and near the launch complex. These effects would be transient and there would be neither long-term nor cumulative impacts to the environment. Some short-term ozone degradation would occur along the flight path of the vehicle as the vehicle passes through the stratosphere and deposits ozone-depleting chemicals (primarily hydrogen chloride) from solid rocket boosters. These effects would be transient and neither long-term nor cumulative impacts would be expected to the ozone layer (USAF 2000).

NO ACTION ALTERNATIVE. There would be no environmental impacts associated with the No Action Alternative.

### Environmental Impacts of Potential Nonradiological Launch Accidents

ALTERNATIVES 1 AND 2. Nonradiological accidents could occur during preparation for and launch of the MSL spacecraft at CCAFS. The two nonradiological accidents of principal concern would be a liquid propellant spill and a launch vehicle failure.

Propellant spills or releases would be minimized through remotely operated actions that close applicable valves and safe the propellant loading system. Propellant loading would occur only shortly before launch, further minimizing the potential for accidents.

Range Safety at CCAFS uses models to predict launch hazards to the public and to launch site personnel prior to a launch. These models calculate the risk of injury resulting from exposure to potentially toxic exhaust gases from normal launches, and from exposure to potentially toxic concentrations, blast overpressure or debris due to a failed launch. The launch could be postponed if the predicted collective risk of injury from exposure to toxic gases, blast overpressure or debris exceeds acceptable limits (USAF 2004).

A launch vehicle failure on or near the launch area during the first few seconds of flight could result in the release of the propellants onboard the launch vehicle and the spacecraft. The resulting emissions from the combusted propellants would chemically resemble those from a normal launch. Debris would be expected to fall on or near the launch pad or into the Atlantic Ocean. Modeling of postulated accident consequences with meteorological parameters that would result in the greatest concentrations of emissions over land areas, reported in previous USAF environmental documentation (USAF 1998, USAF 2000), indicates that the emissions would not reach levels threatening public health.

NO ACTION ALTERNATIVE. Under the No Action Alternative, NASA would not complete preparations for and implement the MSL mission. The No Action Alternative would not involve any of the environmental impacts associated with potential launch-related accidents.

**Environmental Impacts of Potential Radiological Launch Accidents**

ALTERNATIVE 1. A principal concern associated with the launch of the proposed spacecraft involves potential accidents that could result in the release of some of the radioactive material onboard the spacecraft. The MSL rover would be electrically powered by one Multi-Mission Radioisotope Thermoelectric Generator (MMRTG) containing plutonium dioxide (consisting primarily of plutonium-238).

The U.S. Department of Energy (DOE) prepared a nuclear risk assessment to support this EIS. DOE's *Nuclear Risk Assessment for the Mars Science Laboratory Environmental Impact Statement* (DOE 2006a) was prepared in advance of the more detailed Final Safety Analysis Report (FSAR) that would be prepared for the MSL mission in accordance with the formal launch approval process required by Presidential Directive/National Security Council Memorandum 25 (PD/NSC-25) should the Proposed Action (Alternative 1) be selected for implementation. Should the results to be reported in the FSAR differ markedly from those presented in this EIS, NASA would consider the new information and determine the need for additional environmental documentation.

The nuclear risk assessment for the MSL mission considers: (1) potential accidents associated with the launch, and their probabilities and accident environments; (2) the response of the MMRTG to such accidents in terms of the estimated amounts of radioactive material released (that portion of the release that becomes airborne is

herein called the source terms) and the release probabilities; and (3) the radiological consequences and risks associated with such releases.

Information on potential accidents and probabilities were developed by NASA based on information provided by the potential launch service providers and the spacecraft provider. DOE then assessed the response of the MMRTG to these accidents and estimated the amount of radioactive material that could be released. Finally, DOE determined the potential consequences of each release to the environment and to the potentially exposed population. Accidents were assessed over all mission launch phases, from pre-launch operations through Earth escape, and consequences were assessed for both the regional population near the launch site and the global population.

Results of the risk assessment for this DEIS show that the most likely outcome of implementing the Proposed Action (Alternative 1) would be a successful launch with no release of radioactive materials. The risk assessment did, however, identify potential launch accidents that, while not expected, could result in a release of plutonium dioxide in the launch area, southern Africa following suborbital reentry, and other global locations following orbital reentry. However, in each of these regions an accident resulting in a release of plutonium dioxide is unlikely (*i.e.*, the estimated probability of such an accident in each region ranges from 1 in several hundred to 1 in several thousand). Accidents which would result in impacts in the Atlantic Ocean would not be expected to result in a release of plutonium dioxide. Failures occurring after the spacecraft escapes the Earth's gravity field would not be expected to result in a release of plutonium dioxide.

The radiological impacts or consequences for each postulated accident were calculated in terms of (1) impacts to individuals in terms of the maximum individual dose (the largest expected dose that any person could receive for a particular accident); (2) impacts to the exposed portion of the population in terms of the potential for additional latent cancer fatalities due to a radioactive release (*i.e.*, cancer fatalities that are in excess of those latent cancer fatalities which the general population would normally experience from all causes over a long-term period following the release); and (3) impacts to the environment in terms of land area contaminated at or above specified levels.

Potential environmental contamination was evaluated in terms of areas exceeding various screening levels and dose-rate related criteria. For this EIS, land areas estimated to be contaminated above a screening level of 0.2 microcuries per square meter ($\mu Ci/m^2$) (used by NASA in the evaluations of previous missions) have been identified for the purpose of evaluating the need for potential characterization and cleanup. Costs associated with these efforts, should decontamination be required, could vary widely ($101 million to $562 million per square kilometer or about $267 million to $1.5 billion per square mile) depending upon the characteristics and size of the contaminated area.

The estimated mean radiological consequences are summarized in Table ES-1. Section 4.1.4 of this DEIS describes the risk assessment in greater detail, with the results presented for both mean and 99-th percentile values. For the purposes of this

summary, the accident consequences and associated risks are presented only in terms of the mean. The 99-th percentile value reflects the potential for higher radiological consequences to the exposed population at lower probabilities than the mean value. The 99-th percentile consequences are typically 5 to 15 times higher but at probabilities 100 times lower than the mean consequences.

The accident probabilities and mean consequences summarized in Table ES-1, especially for launch area accidents, are the result of the summation of individual accidents that have a wide range of consequences and probabilities, qualitatively ranging from unlikely to very unlikely. For launch-related problems that could occur prior to launch, the most likely result would be a safe hold or termination of the launch countdown with no radiological consequences. After lift-off, most accidents would lead to activation of safety systems that would result in automatic or commanded destruction of the launch vehicle. This unlikely situation, with an estimated mean probability of approximately 1 in 480 (a significant fraction of the 1 in 420 launch area accidents probability), could result in a release of about 0.02 percent (about 1 gram (0.04 ounce)) of the approximately 4.8 kilograms (10.6 pounds) of plutonium dioxide in the MMRTG.

**TABLE ES-1. SUMMARY OF ESTIMATED MEAN RADIOLOGICAL CONSEQUENCES**

| | Launch Area Accidents | Accidents Beyond The Launch Area (Pre-Orbit) | Accidents Beyond The Launch Area (Orbit) | Overall Mission Accidents |
|---|---|---|---|---|
| Probability of an Accident with a Release | 1 in 420 | 1 in 1,100 | 1 in 830 | 1 in 220 |
| Maximum Individual Dose, rem | 0.14 | 0.23 | 0.7 | 0.31 |
| Latent Cancer Fatalities | 0.4 | 0.003 | 0.03 | 0.2 |
| Land Contamination [(a)], square kilometers (square miles) | 6 (2) | 0.02 (0.008) | 0.04 (0.02) | 3 (1) |

(a) Land area, contaminated above a screening level of 0.2 μCi/m$^2$, requiring monitoring but not necessarily requiring decontamination.

The predicted mean radiological dose to the maximally exposed individual from an unlikely launch area accident would be about 0.1 rem. No short-term radiological effects would be expected from such an exposure. Each exposure would, however, yield an increase in the statistical likelihood of a latent cancer fatality over the long term. For an unlikely accident with a release which could occur in and near the launch area, a mean of 0.2 additional latent cancer fatalities could occur among the potentially exposed members of the local and global populations. This assumes no mitigation actions, such as sheltering and exclusion of people from contaminated land areas.

Results of the risk assessment indicate that an unlikely launch area accident involving the intentional destruction of all launch vehicle stages could result in less than three

square kilometers (less than one square mile) potentially contaminated above the 0.2 μCi/m$^2$ screening level.

Less likely launch area accidents include explosion on the pad, situations where the spacecraft is detached from the launch vehicle, and accidents where the vehicle safety systems are assumed to fail. The probabilities of these types of accidents range from approximately 1 in 8,000 to 1 in 800,000, and could result in higher mean releases of plutonium dioxide (up to 2 percent of the MMRTG inventory) with the corresponding potential for higher consequences.

The maximally exposed individual could receive a dose ranging from a fraction of one rem up to about 30 rem following the more severe types of very unlikely accidents, such as ground impact of the entire launch vehicle. It should be noted that there are large variations and uncertainties in the prediction of close-in dose modeling for such complicated accident situations. Assuming no mitigation actions, such as sheltering and exclusion of people from contaminated land areas, radiation doses to the potentially exposed members of the population from a very unlikely launch accident could result in up to 60 mean additional cancer fatalities over the long term.

Results of the risk assessment also indicate that for the very unlikely accident that involves ground impact of the entire launch vehicle, roughly 90 square kilometers (about 35 square miles) of land area could be contaminated above the 0.2 μCi/m$^2$ screening level.

For accidents that occur prior to or shortly after the spacecraft reaches Earth orbit (designated Pre-Orbit in Table ES-1) for which debris could impact land, the total probability of an accident resulting in a release during this phase is considered to be unlikely, about 1 in 1,100. The maximum (mean value) dose received by an individual close to the impact site would be about 0.23 rem. The collective dose received by all individuals within the potentially exposed global population would result in about 0.003 mean additional latent cancer fatalities within the exposed population.

For accidents after the spacecraft reaches Earth orbit (designated Orbit in Table ES-1) during which debris could impact land, the total probability of an accident resulting in a release is considered to be unlikely, about 1 in 830. The maximum (mean value) dose received by an individual close to the impact site would be about 0.7 rem. The collective dose received by all individuals within the potentially exposed global population would result in about 0.03 mean additional latent cancer fatalities within the exposed population.

Considering both the unlikely and the very unlikely launch accidents assessed in this DEIS, the maximally exposed member of the exposed population faces a less than 1 in 1 million chance of incurring a latent cancer due to a failure of the MSL mission.

<u>ALTERNATIVE 2</u>. Under Alternative 2 the MSL rover would utilize solar energy as its primary source of electrical power. Alternative 2 would not involve any MMRTG-associated radiological risks as a MMRTG would not be used for this mission alternative. If Alternative 2 is selected for the MSL mission, NASA may consider the use of up to 30 radioisotope heater units to provide additional heat help maintain the

solar-powered rover's health and functionality during extreme cold temperature conditions. The use of radioisotope heater units for this alternative could result in mission risks and related radiological consequences of nominally 2 percent of the estimated risks and consequences associated with the Proposed Action (Alternative 1). In that event, NASA would consider the need for additional environmental documentation.

NO ACTION ALTERNATIVE. Under the No Action Alternative NASA would not complete preparations for and implement the MSL mission. The No Action Alternative would not involve any of the radiological risks associated with potential launch accidents.

## SUMMARY COMPARISON OF THE ALTERNATIVES

Table ES-2 presents a summary comparison of the Proposed Action (Alternative 1), Alternative 2, and the No Action Alternative in terms of each alternative's capabilities for operating and conducting science on the surface of Mars, the anticipated environmental impacts of normal implementation of each alternative, and the potential environmental impacts in the event of an unlikely launch accident for each alternative.

## TABLE ES-2. SUMMARY COMPARISON OF THE MSL MISSION ALTERNATIVES

| | **Proposed Action (Alternative 1)** | **Alternative 2** | **No Action Alternative** |
|---|---|---|---|
| Rover Power Alternative | MMRTG | Solar Array | Not applicable |
| Functional Capability | Capable of operating for at least one Mars year at landing sites between 60° North and 60° South latitudes on Mars | Limited-lifetime capability for operating at landing sites between 5° North and 20° North latitudes on Mars | Not applicable |
| Science Capability | Capable of accomplishing all science objectives at any scientifically desirable landing site between 60° North and 60° South latitudes | Capable of accomplishing all science objectives only for landing sites restricted to 15° North latitude<br>Capable of accomplishing minimum science objectives for landing sites between 5° North and 20° North | No science achieved |
| Anticipated Environmental Impacts | Short-term impacts associated with exhaust emissions from the launch vehicle during a normal launch | Short-term impacts associated with exhaust emissions from the launch vehicle during a normal launch | No impacts |
| Potential Environmental Impacts in the Unlikely Event of a Launch Accident | Potential impacts associated with combustion of released propellants and falling debris<br>Potential radiological impacts associated with unlikely release of some of the $PuO_2$ from the MMRTG | Potential impacts associated with combustion of released propellants and falling debris<br>Possible use of radioisotope heater units to provide additional heat for the rover could result in potential radiological impacts associated with unlikely release of some of the $PuO_2$ from the radioisotope heater units | No potential impacts |

This page intentionally left blank.

# TABLE OF CONTENTS

**Section** **Page**

**ABSTRACT** ..... **iii**

**EXECUTIVE SUMMARY** ..... **v**

**LIST OF FIGURES** ..... **xix**

**LIST OF TABLES** ..... **xx**

**ABBREVIATIONS AND ACRONYMS** ..... **xxi**

**COMMON METRIC/BRITISH SYSTEM EQUIVALENTS** ..... **xxv**

**1 PURPOSE AND NEED FOR THE ACTION** ..... **1-1**

1.1 BACKGROUND ..... 1-1
1.2 PURPOSE OF THE ACTION ..... 1-3
1.3 NEED FOR THE ACTION ..... 1-3
1.4 NEPA PLANNING AND SCOPING ACTIVITIES ..... 1-4

**2 DESCRIPTION AND COMPARISON OF ALTERNATIVES** ..... **2-1**

2.1 DESCRIPTION OF THE PROPOSED ACTION (ALTERNATIVE 1) ..... 2-2
2.1.1 Mission Description ..... 2-3
2.1.2 Spacecraft Description ..... 2-9
2.1.3 Rover Electrical Power ..... 2-14
2.1.4 Spacecraft Processing ..... 2-19
2.1.5 Representative Launch Vehicle Configurations for the MSL Mission ..... 2-20
2.1.5.1 Description of the Atlas V 541 Launch Vehicle ..... 2-20
2.1.5.1.1 First Stage ..... 2-21
2.1.5.1.2 Centaur Second Stage ..... 2-21
2.1.5.1.3 Payload Fairing ..... 2-21
2.1.5.1.4 Atlas V Space Launch Complex-41 ..... 2-22
2.1.5.1.5 Launch Vehicle Processing ..... 2-22
2.1.5.1.6 Launch Profile ..... 2-23
2.1.5.2 Description of the Delta IV Heavy Launch Vehicle ..... 2-24
2.1.5.2.1 First Stage ..... 2-25
2.1.5.2.2 Second Stage ..... 2-25
2.1.5.2.3 Payload Fairing ..... 2-25
2.1.5.2.4 Delta IV Space Launch Complex-37 ..... 2-25
2.1.5.2.5 Launch Vehicle Processing ..... 2-26
2.1.5.2.6 Launch Profile ..... 2-26
2.1.5.3 Flight Termination System ..... 2-27
2.1.5.4 Range Safety Considerations ..... 2-28
2.1.5.5 Electromagnetic Environment ..... 2-29
2.1.6 Radiological Emergency Response Planning ..... 2-29
2.2 DESCRIPTION OF ALTERNATIVE 2 ..... 2-30
2.2.1 Mission and Spacecraft Description ..... 2-30

2.2.2 Solar Power Availability ..... 2-31
2.2.3 Operational Considerations ..... 2-33
2.3 DESCRIPTION OF THE NO ACTION ALTERNATIVE..... 2-34
2.4 ALTERNATIVES CONSIDERED BUT NOT EVALUATED FURTHER.... 2-34
2.4.1 Alternative Power Sources..... 2-34
2.4.1.1 Other Radioisotope RTGs..... 2-34
2.4.1.2 Power Systems Requiring Less Plutonium Dioxide ..... 2-35
2.4.2 Additional Heat Sources ..... 2-35
2.5 COMPARISON OF ALTERNATIVES INCLUDING THE PROPOSED ACTION..... 2-35
2.5.1 Comparison of Mission Science Capabilities ..... 2-36
2.5.2 Comparison of Potential Environmental Impacts ..... 2-37
2.5.2.1 Environmental Impacts of a Normal Launch ..... 2-37
2.5.2.2 Environmental Impacts of Potential Nonradiological Launch Accidents..... 2-39
2.5.2.3 Environmental Impacts of Potential Radiological Launch Accidents..... 2-40
2.5.2.3.1 The EIS Nuclear Risk Assessment ..... 2-41
2.5.2.3.2 Accident Probabilities and Consequences..... 2-42
2.5.2.3.3 Mission Risks ..... 2-46
2.5.3 Summary Comparison of the Alternatives..... 2-47

**3 DESCRIPTION OF THE AFFECTED ENVIRONMENT ..... 3-1**
3.1 CAPE CANAVERAL AIR FORCE STATION REGIONAL AREA..... 3-1
3.1.1 Land Resources..... 3-1
3.1.2 Air Resources ..... 3-3
3.1.2.1 Climate..... 3-3
3.1.2.2 Air Quality ..... 3-4
3.1.3 Ambient Noise ..... 3-5
3.1.4 Geology and Soils..... 3-5
3.1.5 Hydrology and Water Quality ..... 3-5
3.1.5.1 Surface Waters ..... 3-5
3.1.5.2 Surface Water Quality ..... 3-5
3.1.5.3 Groundwater Sources ..... 3-5
3.1.5.4 Groundwater Quality ..... 3-6
3.1.5.5 Offshore Environment ..... 3-6
3.1.6 Biological Resources ..... 3-6
3.1.6.1 Terrestrial Resources..... 3-6
3.1.6.2 Aquatic Resources..... 3-7
3.1.6.3 Threatened and Endangered Species..... 3-7
3.1.7 Socioeconomics..... 3-7
3.1.7.1 Population ..... 3-7
3.1.7.2 Economy ..... 3-8
3.1.7.3 Transportation Systems ..... 3-9
3.1.7.4 Public and Emergency Services ..... 3-10
3.1.7.5 Recreation..... 3-10
3.1.7.6 Cultural/Historic/Archaeological Resources ..... 3-10

3.2 THE GLOBAL ENVIRONMENT ..... 3-11
3.2.1 Troposphere ..... 3-11
3.2.2 Stratosphere ..... 3-11
3.2.3 Global Population Distribution ..... 3-12
3.2.4 Surface Characteristics ..... 3-13
3.2.5 Background Radiation ..... 3-14
3.2.5.1 Natural and Manmade Sources ..... 3-14
3.2.5.2 Worldwide Plutonium Levels ..... 3-14

**4 ENVIRONMENTAL CONSEQUENCES ..... 4-1**

4.1 ENVIRONMENTAL IMPACTS OF THE PROPOSED ACTION (ALTERNATIVE 1) ..... 4-1
4.1.1 Environmental Consequences of Preparing for Launch ..... 4-3
4.1.2 Environmental Impacts of a Normal Launch ..... 4-4
4.1.2.1 Land Use ..... 4-4
4.1.2.2 Air Quality ..... 4-4
4.1.2.3 Noise ..... 4-5
4.1.2.4 Geology and Soils ..... 4-5
4.1.2.5 Hydrology and Water Quality ..... 4-5
4.1.2.6 Offshore Environment ..... 4-6
4.1.2.7 Biological Resources ..... 4-6
4.1.2.8 Socioeconomics ..... 4-6
4.1.2.9 Environmental Justice ..... 4-7
4.1.2.10 Cultural/Historic/Archaeological Resources ..... 4-7
4.1.2.11 Health and Safety ..... 4-7
4.1.2.12 Global Environment ..... 4-8
4.1.2.13 Orbital and Reentry Debris ..... 4-8
4.1.3 Environmental Impacts of Potential Accidents Not Involving Radioactive Material ..... 4-8
4.1.3.1 Liquid Propellant Spills ..... 4-9
4.1.3.2 Launch Failures ..... 4-10
4.1.4 Environmental Impacts of Potential Accidents Involving Radioactive Material ..... 4-11
4.1.4.1 Risk Assessment Methodology ..... 4-12
4.1.4.2 Launch Accidents and Accident Probabilities ..... 4-15
4.1.4.3 MMRTG Response to Accident Environments ..... 4-19
4.1.4.4 Accident Probabilities and Source Terms ..... 4-21
4.1.4.5 Radiological Consequences ..... 4-24
4.1.4.6 Discussion of the Results ..... 4-28
4.1.4.7 Impacts of Radiological Releases on the Environment ..... 4-29
4.1.4.8 Mission Risks ..... 4-31
4.1.4.9 Uncertainty ..... 4-34
4.1.5 Radiological Contingency Response Planning ..... 4-35
4.2 ENVIRONMENTAL IMPACTS OF ALTERNATIVE 2 ..... 4-36
4.2.1 Environmental Consequences of Preparing for Launch ..... 4-37
4.2.2 Environmental Impacts of a Normal Launch ..... 4-37
4.2.3 Environmental Impacts of Potential Accidents ..... 4-37

4.3 ENVIRONMENTAL IMPACTS OF THE NO ACTION ALTERNATIVE .... 4-37
4.4 CUMULATIVE IMPACTS ..... 4-38
4.5 ENVIRONMENTAL EFFECTS THAT CANNOT BE AVOIDED ..... 4-39
4.6 INCOMPLETE OR UNAVAILABLE INFORMATION ..... 4-40
4.7 RELATIONSHIP BETWEEN SHORT-TERM USES OF THE HUMAN ENVIRONMENT AND THE MAINTENANCE AND ENHANCEMENT OF LONG-TERM PRODUCTIVITY ..... 4-41
4.7.1 Short-Term Uses ..... 4-41
4.7.2 Long-Term Productivity ..... 4-41
4.8 IRREVERSIBLE AND IRRETRIEVABLE COMMITMENT OF RESOURCES ..... 4-42
4.8.1 Energy and Fuels ..... 4-42
4.8.2 Other Materials ..... 4-42
4.9 ENVIRONMENTAL COMPLIANCE AT CCAFS AND KSC ..... 4-42

**5 LIST OF PREPARERS ..... 5-1**

**6 AGENCIES, ORGANIZATIONS AND INDIVIDUALS CONSULTED ..... 6-1**

**7 INDEX ..... 7-1**

**8 REFERENCES ..... 8-1**

**APPENDIX A: GLOSSARY OF TERMS ..... A-1**

**APPENDIX B: EFFECTS OF PLUTONIUM ON THE ENVIRONMENT ..... B-1**

**APPENDIX C: ENVIRONMENTAL JUSTICE ANALYSIS ..... C-1**

# LIST OF FIGURES

**Figure** **Page**

2-1. ARRIVAL DATES FOR THE PROPOSED MSL MISSION ..... 2-4
2-2. MSL COMMUNICATION COVERAGE AT ARRIVAL ..... 2-5
2-3. ENTRY, DESCENT AND LANDING PHASE ..... 2-7
2-4. FINAL LANDING SEQUENCE (SKYCRANE PHASE) ..... 2-7
2-5. ILLUSTRATION OF THE PROPOSED MSL FLIGHT SYSTEM ..... 2-9
2-6. ILLUSTRATION OF THE MSL DESCENT STAGE AND PROPOSED MSL ROVER ..... 2-10
2-7. ILLUSTRATION OF THE PROPOSED MSL ROVER ..... 2-11
2-8. ILLUSTRATION OF THE SCIENCE INSTRUMENT LOCATIONS ON THE PROPOSED MSL ROVER ..... 2-14
2-9. ILLUSTRATION OF A MULTI-MISSION RADIOISOTOPE THERMOELECTRIC GENERATOR ..... 2-15
2-10. ILLUSTRATION OF A GENERAL PURPOSE HEAT SOURCE MODULE ..... 2-17
2-11. ILLUSTRATION OF AN ATLAS V LAUNCH VEHICLE WITH SOLID ROCKET BOOSTERS ..... 2-21
2-12. ILLUSTRATION OF THE MSL SPACECRAFT WITHIN THE PAYLOAD FAIRING ENVELOPE ..... 2-22
2-13. TYPICAL ATLAS V ASCENT PROFILE ..... 2-24
2-14. ILLUSTRATION OF A DELTA IV HEAVY LAUNCH VEHICLE ..... 2-25
2-15. TYPICAL DELTA IV HEAVY ASCENT PROFILE ..... 2-27
2-16. ILLUSTRATION OF A REPRESENTATIVE SOLAR-POWERED ALTERNATIVE 2 MSL ROVER ..... 2-31
2-17. ESTIMATED SOLAR POWER AVAILABILITY ON THE SURFACE OF MARS ..... 2-32
2-18. ESTIMATED ROVER SCIENCE CAPABILITY WITH SOLAR POWER ..... 2-33
2-19. ESTIMATED LAUNCH-RELATED PROBABILITIES ..... 2-41
3-1. THE REGIONAL AREA NEAR CCAFS ..... 3-2
3-2. CCAFS AND THE SURROUNDING AREA ..... 3-3
3-3. ATMOSPHERIC LAYERS AND THEIR ESTIMATED ALTITUDE ..... 3-12
4-1. ESTIMATED LAUNCH-RELATED PROBABILITIES ..... 4-2
4-2. THE RADIOLOGICAL RISK ASSESSMENT METHODOLOGY ..... 4-14

# LIST OF TABLES

**Table** **Page**

ES-1. SUMMARY OF ESTIMATED MEAN RADIOLOGICAL CONSEQUENCES ..... x

ES-2. SUMMARY COMPARISON OF THE MSL MISSION ALTERNATIVES ..... xiii

2-1. OPERATIONAL CAPABILITIES FOR THE MSL MISSION ..... 2-2

2-2. MSL SCIENCE INVESTIGATIONS ..... 2-12

2-3. UNITED STATES SPACE MISSIONS INVOLVING RADIOISOTOPE POWER SOURCES ..... 2-16

2-4. TYPICAL ISOTOPIC COMPOSITION OF AN MMRTG ..... 2-18

2-5. ESTIMATED SCIENCE CAPABILITY COMPARISON OF THE MSL MISSION ALTERNATIVES ..... 2-36

2-6. SUMMARY OF ANTICIPATED ENVIRONMENTAL IMPACTS OF THE MSL MISSION ALTERNATIVES ..... 2-38

2-7. SUMMARY COMPARISON OF THE MSL MISSION ALTERNATIVES ..... 2-48

3-1. SUMMARY AIR QUALITY DATA NEAR CCAFS FOR 2004 ..... 3-4

3-2. POPULATION OF THE SIX-COUNTY REGION ..... 3-8

3-3. MINORITY POPULATION OF THE SIX-COUNTY REGION ..... 3-9

3-4. GLOBAL POPULATION AND SURFACE CHARACTERISTICS BY LATITUDE BAND ..... 3-13

3-5. AVERAGE ANNUAL EFFECTIVE DOSE EQUIVALENT OF IONIZING RADIATION TO A MEMBER OF THE U.S. POPULATION ..... 3-15

4-1. ACCIDENT END STATE PROBABILITIES ..... 4-18

4-2. SUMMARY OF ACCIDENT PROBABILITIES AND SOURCE TERMS ..... 4-22

4-3. SUMMARY OF ESTIMATED RADIOLOGICAL CONSEQUENCES ..... 4-26

4-4. POTENTIAL LAND DECONTAMINATION COST FACTORS ..... 4-31

4-5. SUMMARY OF HEALTH EFFECT MISSION RISKS ..... 4-32

4-6. HEALTH EFFECT MISSION RISK CONTRIBUTIONS BY AFFECTED REGION ..... 4-33

4-7. MAXIMUM INDIVIDUAL RISK ..... 4-34

4-8. CALCULATED INDIVIDUAL RISK AND PROBABILITY OF FATALITY BY VARIOUS CAUSES IN THE UNITED STATES IN 2000 ..... 4-35

# ABBREVIATIONS AND ACRONYMS

## A

| | |
|---|---|
| AEC | U.S. Atomic Energy Commission |
| ADS | Automatic Destruct System |
| AIAA | American Institute of Aeronautics and Astronautics |
| AIHA | American Industrial Hygiene Association |
| Al | aluminum |
| $Al_2O_3$ | aluminum oxide |
| ALSEP | Apollo Lunar Surface Experiments Package |
| APXS | Alpha Particle X-Ray Spectrometer |

## B

| | |
|---|---|
| BEBR | Bureau of Economic and Business Research |
| BEIR | Biological Effects of Ionizing Radiation |
| BLS | U.S. Bureau of Labor and Statistics |

## C

| | |
|---|---|
| ºC | degrees Celsius |
| CAA | Clean Air Act |
| CADS | Centaur Automatic Destruct System |
| CBC | Common Booster Core |
| CCAFS | Cape Canaveral Air Force Station |
| CDS | Command Destruct System |
| CEQ | Council on Environmental Quality |
| CFR | Code of Federal Regulations |
| ChemCam | Laser-Induced Remote Sensing For Chemistry And Micro-Imaging |
| CheMin | X-Ray Diffraction/X-Ray Fluorescence Instrument |
| Ci | curies |
| $Cl_2$ | chlorine |
| Cm | curium |
| cm | centimeters |
| CO | carbon monoxide |
| $CO_2$ | carbon dioxide |
| COMPLEX | Committee on Planetary and Lunar Exploration |

## D

| | |
|---|---|
| DAN | Dynamic Albedo of Neutrons |
| dB | decibels |
| dBA | decibels (A-weighted) |
| DEIS | Draft Environmental Impact Statement |
| DHHS | U.S. Department of Health and Human Services |
| DHS | U.S. Department of Homeland Security |
| DNA | deoxyribonucleic acid |
| DOE | U.S. Department of Energy |
| DOD | U.S. Department of Defense |
| DOI | U.S. Department of the Interior |
| DOS | U.S. Department of State |

## E

| | |
|---|---|
| EA | Environmental Assessment |
| EDE | effective dose equivalent |

| | |
|---|---|
| EIS | Environmental Impact Statement |
| EO | Executive Order |
| EPA | U.S. Environmental Protection Agency |

**F**

| | |
|---|---|
| °F | degrees Fahrenheit |
| FAA | Federal Aviation Administration |
| FAC | Florida Administrative Code |
| FDEP | Florida Department of Environmental Protection |
| FEIS | Final Environmental Impact Statement |
| FR | Federal Register |
| FS | Florida Statute |
| FSAR | Final Safety Analysis Report |
| FSII | full-stack intact impact |
| ft | feet |
| FTS | Flight Termination System |
| FWS | U.S. Fish and Wildlife Service |

**G**

| | |
|---|---|
| g | grams |
| GI | gastro-intestinal |
| GIS | Graphite Impact Shell |
| GPHS | General Purpose Heat Source |

**H**

| | |
|---|---|
| $H_2$ | hydrogen |
| $H_2O$ | water |
| HCl | hydrogen chloride (hydrochloric acid) |
| HIF | Horizontal Integration Facility |
| HPS | Health Physics Society |
| HTPB | hydroxyl-terminated polybutadiene |

**I**

| | |
|---|---|
| IAEA | International Atomic Energy Agency |
| ICRP | International Commission on Radiological Protection |
| ILS-LM | International Launch Services, Incorporated, and Lockheed Martin Corporation |
| in | inches |
| INSRP | Interagency Nuclear Safety Review Panel |
| IR | infrared |
| ISDS | Inadvertent Separation Destruct System |
| ISRP | International Space Research Park |

**J**

| | |
|---|---|
| JPL | Jet Propulsion Laboratory |
| JG-PP | Joint Group on Pollution Prevention |

**K**

| | |
|---|---|
| K | degrees Kelvin |
| KEP | KSC Exploration Park |
| kg | kilograms |
| km | kilometers |
| km/hr | kilometers per hour |
| $km^2$ | square kilometers |
| KSC | Kennedy Space Center |

**L**

| | |
|---|---|
| lb | pounds |
| LDRRP | Low Dose Radiation Research Program |
| $LH_2$ | liquid hydrogen |

| | |
|---|---|
| LNT | Linear, No-Threshold |
| $LO_2$ | liquid oxygen |
| $L_S$ | solar longitude |
| LSTO | Launch Service Task Order |

**M**

| | |
|---|---|
| $\mu Ci/m^2$ | microcuries per square meter |
| $\mu g/m^3$ | micrograms per cubic meter |
| m | meters |
| MAHLI | Mars Hand Lens Imager |
| MARDI | Mars Descent Imager |
| MastCam | Mast Camera |
| MECO | main engine cutoff |
| MEP | Mars Exploration Program |
| MET | mission elapsed time |
| MFCO | Mission Flight Control Officer |
| MHW | multi-hundred watt |
| mi | miles |
| $mi^2$ | square miles |
| MINWR | Merritt Island National Wildlife Refuge |
| MMRTG | Multi-Mission Radioisotope Thermoelectric Generator |
| mph | miles per hour |
| mrem | millirems |
| MRO | Mars Reconnaissance Orbiter |
| MSL | Mars Science Laboratory |
| MST | Mobile Service Tower |
| mt | metric tons |

**N**

| | |
|---|---|
| $N_2$ | nitrogen |
| NAAQS | National Ambient Air Quality Standards |
| NASA | National Aeronautics and Space Administration |
| NCRP | National Council on Radiation Protection and Measurements |
| NEPA | National Environmental Policy Act |
| NLS | NASA Launch Service |
| nmi | nautical miles |
| $NO_2$ | nitrogen dioxide |
| NOA | Notice of Availability |
| NOAA | National Oceanic and Atmospheric Administration |
| NOI | Notice of Intent |
| $NO_X$ | oxides of nitrogen |
| NPS | U.S. National Park Service |
| NRC | U.S. Nuclear Regulatory Commission |
| NRHP | National Register of Historic Places |

**O**

| | |
|---|---|
| $O_3$ | ozone |
| OSHA | Occupational Safety & Health Administration |
| oz | ounces |

**P**

| | |
|---|---|
| PAFB | Patrick Air Force Base |
| Pb | lead |
| PEIS | Programmatic Environmental Impact Statement |
| PHSF | Payload Hazardous Servicing Facility |
| PLF | payload fairing |
| $PM_{2.5}$ | particulate matter less than 2.5 micrometers in diameter |

| | |
|---|---|
| $PM_{10}$ | particulate matter less than 10 micrometers in diameter |
| PMSR | Preliminary Mission System Review |
| ppm | parts per million |
| Pu | plutonium |
| $PuO_2$ | plutonium dioxide |

**R**

| | |
|---|---|
| RAD | Radiation Assessment Detector |
| rem | roentgen-equivalent-man |
| REMS | Rover Environmental Monitoring Station |
| RHU | Radioisotope Heater Unit |
| RLSP | Request for Launch Service Proposal |
| ROD | Record of Decision |
| RP-1 | rocket propellant-1 |
| RPS | Radioisotope Power System |
| RTG | Radioisotope Thermoelectric Generator |

**S**

| | |
|---|---|
| s | seconds |
| SAM | Sample Analysis at Mars |
| SC | spacecraft |
| SCII | spacecraft intact impact |
| SECO | second stage engine cutoff |
| SLC | space launch complex |
| SNAP | Systems For Nuclear Auxiliary Power |
| $SO_2$ | sulfur dioxide |
| Sr | strontium |
| SRB | solid rocket booster |

**U**

| | |
|---|---|
| UNSCEAR | United Nations Scientific Committee on the Effects of Atomic Radiation |
| USAF | U.S. Air Force |
| USBC | U.S. Bureau of the Census |
| U.S.C. | United States Code |

**V**

| | |
|---|---|
| VIF | Vertical Integration Facility |

**W**

| | |
|---|---|
| W | watts |

**Y**

| | |
|---|---|
| yr | year |

# COMMON METRIC/BRITISH SYSTEM EQUIVALENTS

**Length**

| | |
|---|---|
| 1 centimeter (cm) = 0.3937 inch | 1 inch = 2.54 cm |
| 1 centimeter = 0.0328 foot (ft) | 1 foot = 30.48 cm |
| 1 meter (m) = 3.2808 feet | 1 ft = 0.3048 m |
| 1 meter = 0.0006 mile (mi) | 1 mi = 1609.3440 m |
| 1 kilometer (km) = 0.6214 mile | 1 mi = 1.6093 km |
| 1 kilometer = 0.53996 nautical mile (nmi) | 1 nmi = 1.8520 km |
| | 1 mi = 0.87 nmi |
| | 1 nmi = 1.15 mi |

**Area**

| | |
|---|---|
| 1 square centimeter ($cm^2$) = 0.1550 square inch ($in^2$) | 1 $in^2$ = 6.4516 $cm^2$ |
| 1 square meter ($m^2$) = 10.7639 square feet ($ft^2$) | 1 $ft^2$ = 0.09290 $m^2$ |
| 1 square kilometer ($km^2$) = 0.3861 square mile ($mi^2$) | 1 $mi^2$ = 2.5900 $km^2$ |
| 1 hectare (ha) = 2.4710 acres (ac) | 1 ac = 0.4047 ha |
| 1 hectare (ha) = 10,000 square meters ($m^2$) | 1 $ft^2$ = 0.000022957 ac |

**Volume**

| | |
|---|---|
| 1 cubic centimeter ($cm^3$) = 0.0610 cubic inch ($in^3$) | 1 $in^3$ = 16.3871 $cm^3$ |
| 1 cubic meter ($m^3$) = 35.3147 cubic feet ($ft^3$) | 1 $ft^3$ = 0.0283 $m^3$ |
| 1 cubic meter ($m^3$) = 1.308 cubic yards ($yd^3$) | 1 $yd^3$ = 0.76455 $m^3$ |
| 1 liter (l) = 1.0567 quarts (qt) | 1 qt = 0.9463264 l |
| 1 liter = 0.2642 gallon (gal) | 1 gal = 3.7845 l |
| 1 kiloliter (kl) = 264.2 gal | 1 gal = 0.0038 kl |

**Weight**

| | |
|---|---|
| 1 gram (g) = 0.0353 ounce (oz) | 1 oz = 28.3495 g |
| 1 kilogram (kg) = 2.2046 pounds (lb) | 1 lb = 0.4536 kg |
| 1 metric ton (mt) = 1.1023 tons | 1 ton = 0.9072 metric ton |

**Energy**

| | |
|---|---|
| 1 joule= 0.0009 British thermal unit (BTU) | 1 BTU = 1054.18 joule |
| 1 joule= 0.2392 gram-calorie (g-cal) | 1 g-cal = 4.1819 joule |

**Pressure**

| | |
|---|---|
| 1 newton/square meter ($N/m^2$) = 0.0208 pound/square foot (psf) | 1 psf = 48 $N/m^2$ |

**Force**

| | |
|---|---|
| 1 newton (N) = 0.2248 pound-force (lbf) | 1 lbf = 4.4478 N |

**Radiation**

| | |
|---|---|
| 1 becquerel (Bq) = $2.703 \times 10^{-11}$ curies (Ci) | 1 Ci = $3.70 \times 10^{10}$ Bq |
| 1 sievert (Sv) = 100 rem | 1 rem = 0.01 Sv |

This page intentionally left blank.

# 1 PURPOSE AND NEED FOR THE ACTION

This Draft Environmental Impact Statement (DEIS) has been prepared by the National Aeronautics and Space Administration (NASA) to assist in the decision-making process as required by the National Environmental Policy Act of 1969, as amended (NEPA) (42 U.S.C. 4321 *et seq.*); Executive Order (EO) 12114, *Environmental Effects Abroad of Major Federal Actions*; Council on Environmental Quality Regulations (40 CFR parts 1500–1508); and NASA policies and procedures at 14 CFR part 1216. This DEIS provides information associated with potential environmental impacts of implementing a proposed Mars Science Laboratory (MSL) mission, which would explore and quantitatively assess a local region on the surface of Mars as a potential habitat for life, past or present. This document is a Tier 2 mission-specific DEIS under NASA's Mars Exploration Program (NASA 2005a) (see Section 1.4 below). Launch of the MSL mission would take place at Cape Canaveral Air Force Station (CCAFS), Florida, during the September – November 2009 opportunity. Chapter 2 of this DEIS evaluates the alternatives considered to achieve the MSL mission.

## 1.1 BACKGROUND

In response to the recommendations by its advisory and analysis groups, NASA is currently undertaking a long-term systematic program of Mars scientific exploration, the Mars Exploration Program (MEP). The overarching goal of the program is to answer the question, "*Did life ever exist on Mars?*" The scientific objectives established by the program to address this goal are to search for evidence of past or present life, to characterize the climate and volatile history of Mars, to understand the surface and subsurface geology (including the nature of the interior), and to characterize the Martian environment quantitatively in preparation for human exploration. One common thread that links these objectives is to explore the role of water in all of its states within the "Mars system," from the top of the atmosphere to the interior.

The MEP is currently implemented as a sustained series of flight missions to Mars, each of which will provide important, focused scientific return. Taking advantage of launch opportunities available approximately every 26 months, the MEP is undertaking a set of flight missions extending into the next decade, including surface-focused missions such as possible return of samples to Earth and astrobiological field laboratories. Surface reconnaissance from orbiting missions (*e.g.*, Mars Global Surveyor, Mars Odyssey, and Mars Reconnaissance Orbiter (MRO)), in addition to forming the basis for understanding the processes that have formed and modified the Mars environment, would provide the primary means for selecting the best sites for surface exploration.

The MEP is fundamentally a science driven program focused on understanding and characterizing Mars as a dynamic system and ultimately addressing whether life is or was ever a part of that system. The MEP further embraces the challenges associated with the development of a predictive capability for Martian climate and how the role of water and other factors, such as variations in the tilt of the planet's polar axis, may have influenced the environmental history of Mars. One of the foundation elements of the scientific strategy for the MEP is also referred to as "*follow the water*." This strategy

connects fundamental program goals pertaining to biological potential, climate, the evolution of the solid planet, and the development of knowledge and technologies applicable to the eventual exploration of Mars by humans.

The core MEP addresses the highest priority scientific investigations directly related to the Program goals and objectives. These planned investigations were derived by means of a highly inclusive process involving a large segment of the broad planetary exploration science community. Proposed MSL investigations would address several of the high-priority scientific investigations recommended to NASA by the science community, *e.g.*, the Space Studies Board's *New Frontiers in the Solar System: An Integrated Exploration Strategy* (SSB 2002) and *Assessment of Mars Science and Mission Priorities* (SSB 2003), and the reports of the Mars Exploration Payload Analysis Group (*e.g.*, MEPAG 2001, MEPAG 2003, MEPAG 2006).

The goals of the MEP are outlined below (NASA 2005a). The science goals described in Section 1.2 for the proposed MSL mission support these MEP goals.

- Determine if life exists or has ever existed on Mars
  - determine if life exists today
  - determine if life existed on Mars in the past
  - assess the extent of organic chemical evolution on Mars
- Understand the current state and evolution of the atmosphere, surface, and interior of Mars
  - characterize the current climate and climate processes of Mars
  - characterize the ancient climate of Mars
  - determine the geological processes that have resulted in formation of the Martian crust and surface
  - characterize the structure, dynamics, and history of the planet's interior
- Develop an understanding of Mars in support of possible future human exploration
  - acquire appropriate Martian environmental data such as those required to characterize the radiation environment
  - conduct *in situ* engineering and science demonstrations.

The MEP would also ensure the development and demonstration of the technologies required to enable attainment of these goals. Specifically, the program would enable new classes of Mars science investigations, including, for example, remote astrobiology and new techniques for in situ life detection. Technology developments and improvements over the course of the program would enable a progressive increase in the payload mass delivered to Mars orbit and to the surface by program spacecraft, enhance the capability to safely and precisely place payloads at any desired location on the surface, and enable full access to the subsurface, surface and atmospheric regions.

Technology improvements would also enable long-lived (one Mars year (1.88 Earth years) or longer duration, as a goal) surface science investigations, and support the development of robotic assets to provide a nearly continuous data return from the surface (NASA 2005a).

## 1.2 PURPOSE OF THE ACTION

The purpose of the MSL is to both conduct comprehensive science on the surface of Mars and demonstrate technological advancements in the exploration of Mars. The overall scientific goals are: 1) assess the biological potential of at least one selected site on Mars, 2) characterize the geology and geochemistry of the landing region at all appropriate spatial scales, 3) investigate planetary processes of relevance to past habitability, and 4) characterize the broad spectrum of the Martian surface radiation environment. The following specific objectives are planned for the mission to address these goals:

- determine the nature and inventory of organic carbon compounds;
- inventory the chemical building blocks of life (carbon, hydrogen, nitrogen, oxygen, phosphorus, and sulfur);
- identify features that may represent the effects of biological processes;
- investigate the chemical, isotopic, and mineralogical composition of Martian surface and near-surface geological materials;
- interpret the processes that have formed and modified rocks and regolith;
- assess long-timescale (*i.e.*, 4-billion-year) atmospheric evolution processes; and
- determine the present state, distribution, and cycling of water and carbon dioxide.

The proposed MSL mission would allow NASA to substantially advance its technological and operational capabilities to deliver a large, mobile science payload safely and precisely to a selected location on the surface of Mars, to conduct comprehensive science investigations on the surface for an extensive period of time, and transmit large volumes of scientific data to Earth.

## 1.3 NEED FOR THE ACTION

NASA has documented it's Vision for Space Exploration (NASA 2004a), which includes answering fundamental questions about past or present life in the Solar System and expanding human presence in the Solar System. The Vision for Space Exploration includes robotic and human exploration of Mars. To implement the Vision for Space Exploration and the Mars Exploration Program, a stepwise progression of missions would be required. What has been learned from previous missions and what is being discovered presently, with either orbiting or surface assets, becomes integral to the next set of missions.

As expressed by the Space Studies Board's Committee on Planetary and Lunar Exploration (COMPLEX) in *A Scientific Rationale for Mobility in Planetary Environments* (SSB 1999), mobility is essential because evidence for past or present life on Mars will

very likely not be so abundant or widespread that it will be available in the immediate vicinity of the selected landing site. Without the mobility necessary to conduct *in situ* exploration, it may not be possible to uniquely characterize a target location. COMPLEX further emphasized the need for very capable mobile science platforms that could carry a suite of mutually complementary instruments, have an extensive range and long lifetime, and have one or more manipulative devices for acquiring samples.

Discoveries from earlier missions of the MEP, including NASA's Mars Exploration Rovers (Spirit and Opportunity) and Mars Odyssey missions, and the European Space Agency's Mars Express mission, point definitively to evidence of a past presence of water on Mars and the presence today of subsurface water ice. Data returned and analyzed from these ongoing missions continue to demonstrate a need for global exploration of the planet.

NASA's MRO mission, the most recent mission in the MEP, entered orbit around Mars in March 2006 and, after a period of adjustments to its orbit, will begin its primary science mission in November 2006. Among its several scientific objectives, MRO will search for subsurface water and seek safe and scientifically worthy landing sites for future exploration in general and for the proposed MSL mission in particular.

In 2002, Mars Odyssey found evidence of large amounts of subsurface water ice in the northern arctic plains. NASA's Phoenix Lander mission, first in the series of Mars Scout missions within the MEP, was selected to examine this region in detail. Phoenix is planned to be launched in August 2007 and to arrive at Mars in May 2008 in the beginning of Northern Summer on Mars. The specific landing site, yet to be selected, will be between 65° North and 75° North latitude. Phoenix is designed to study the history of water and search for complex organic molecules in the ice-rich soil of the Martian arctic. Phoenix is a stationary lander designed to operate for 90 days, and is not expected to survive the Northern Winter on Mars.

The MRO and Phoenix missions are expected to yield new information on ancient and recent habitability on Mars both globally and locally. The proposed MSL mission, with its planned capability to "*follow the water*" from a potential landing site within a broad range of latitudes and with its advanced instrumentation, would extend the anticipated discoveries from MRO and Phoenix by acquiring significant, detailed information regarding the habitability of Mars from a scientifically promising location. The proposed MSL mission would also fulfill NASA's strategic technology goals of increasing the mass of science payloads delivered to the surface of Mars, expanding access to higher and lower latitudes, increasing precision landing capability, and increasing design capability to travel on the order of several kilometers (NASA 2004a, NASA 2005a).

## 1.4 NEPA PLANNING AND SCOPING ACTIVITIES

On April 12, 2005, NASA published a Notice of Availability (NOA) of the *Final Programmatic Environmental Impact Statement for the Mars Exploration Program* (MEP PEIS) (NASA 2005a, 70 FR 19102). The Record of Decision for the MEP PEIS was signed on June 22, 2005, enabling continued planning for the MEP, which represents NASA's overall plans for the robotic exploration of Mars through 2020. The MEP PEIS encompasses the launch of at least one spacecraft to Mars during each favorable

launch opportunity, which occurs approximately every 26 months, including the MSL mission currently proposed for the 2009 launch opportunity. Overall environmental compliance in support of the MEP is addressed in the MEP PEIS, and allows planning to continue for the MSL mission.

NASA, in cooperation with the U.S. Department of Energy, is also completing the NEPA process for development of advanced radioisotope power systems. On April 22, 2004, NASA published a Notice of Intent (NOI) in the *Federal Register* (69 FR 21867) to prepare a PEIS for development and qualification for use in space missions of two radioisotope power systems, the Multi-Mission Radioisotope Thermoelectric Generator (MMRTG) and the Stirling Radioisotope Power System (SRG). The *Draft Programmatic Environmental Impact Statement for the Development of Advanced Radioisotope Power Systems* (NASA 2005c) was made available for a 45-day public comment period on January 6, 2006. The public comment period has been completed and the Final PEIS is scheduled for publication in mid-summer 2006 with a Record of Decision anticipated in late Summer or early Autumn 2006. The MMRTG is planned as the source of electrical power for the rover of the Proposed Action (Alternative 1).

On March 10, 2006, NASA published a NOI in the *Federal Register* (71 FR 12402) to prepare an Environmental Impact Statement and conduct scoping for the Mars Science Laboratory mission. Public input and comments on alternatives, potential environmental impacts and concerns associated with the proposed MSL mission were requested. The scoping period ended on April 24, 2006. One scoping comment was received during this period from a Federal agency expressing concerns regarding habitat management of threatened and endangered species near the MSL launch site at CCAFS. These concerns are addressed in Chapters 3 and 4 of this DEIS.

This page intentionally left blank.

# 2 DESCRIPTION AND COMPARISON OF ALTERNATIVES

The purpose of the Mars Science Laboratory (MSL) mission would be to continue the National Aeronautics and Space Administration's (NASA) in-depth exploration of Mars. Specifically, the scientific goals of the mission are to assess the biological potential of at least one selected site on Mars, characterize the geology and geochemistry of the landing region at all appropriate spatial scales, investigate planetary processes of relevance to past habitability, and characterize the broad spectrum of the Martian surface radiation environment.

This Chapter of the Draft Environmental Impact Statement (DEIS) for the MSL mission describes and compares the following alternatives.

- Proposed Action (Alternative 1)—NASA proposes to continue preparations for and implement the MSL mission to Mars. The proposed MSL spacecraft would be launched on board an expendable launch vehicle from Cape Canaveral Air Force Station (CCAFS), Florida, during September – November 2009, and would be inserted into a trajectory toward Mars. The proposed MSL rover would utilize a radioisotope power system as its primary source of electrical power to operate and conduct science on the surface of Mars. The next launch opportunity for a landed mission to Mars would occur during November – December 2011. A description of the Proposed Action is presented in Section 2.1.
- Alternative 2—Under this alternative, NASA would discontinue preparations for the Proposed Action (Alternative 1) and implement an alternative MSL mission to Mars. The alternative MSL spacecraft would be launched on board an expendable launch vehicle from CCAFS, Florida, during September – November 2009, and would be inserted into a trajectory toward Mars. The alternative MSL rover would utilize solar energy as its primary source of electrical power to operate and conduct science on the surface of Mars. The next launch opportunity for a landed mission to Mars would occur during November – December 2011. A description of Alternative 2 is presented in Section 2.2.
- No Action Alternative—Under this alternative, NASA would discontinue preparations for the proposed MSL mission and the spacecraft would not be launched. A description of the No Action Alternative is presented in Section 2.3.

NASA has established target operational capabilities, summarized in Table 2-1, for the proposed MSL mission to meet the objectives discussed in Chapter 1. Both full and minimum operational capabilities have been established. Achieving the full capabilities (*e.g.*, operating on the surface for at least one Mars year) would maximize the potential for the mission to be most responsive to real-time discoveries and fulfill its comprehensive science objectives. Achieving the minimum capabilities (*e.g.*, operating on the surface for at least one-half of a Mars year) would be necessary to assure that the mission addresses its objectives with a reasonable confidence of success.

## TABLE 2-1. OPERATIONAL CAPABILITIES FOR THE MSL MISSION

| Full Operational Capability | Minimum Operational Capability |
|---|---|
| *Launch Related Capability* | |
| Be ready for launch during the 2009 Mars opportunity | Be ready for launch during the 2009 Mars opportunity |
| Be compatible with an intermediate class expendable launch vehicle | Be compatible with an intermediate class expendable launch vehicle |
| *Arrival and Landing-Site Related Capability* | |
| Provide data communication throughout critical events at a rate sufficient to determine the state of the spacecraft in support of fault reconstruction | Provide data communication throughout critical events at a rate sufficient to determine the state of the spacecraft in support of fault reconstruction |
| Be capable of landing on the surface of Mars within a circular target area with a radius of 10 kilometers (km) (6 miles (mi)) | Be capable of landing on the surface of Mars within a circular target area with a radius of 20 km (12 mi) |
| Be capable of landing between 60° North and 60° South latitudes | Be capable of landing between 45° North and 45° South latitudes |
| Be capable of landing at an elevation of up to 2 km (about 1¼ mi) above the mean surface of Mars | Be capable of landing at an elevation of up to 1½ km (about 1 mi) above the mean surface of Mars |
| *Functional Capability* | |
| Be designed to operate at least one Mars year | Be designed to operate at least one-half of a Mars year |
| Be capable of adequate mobility to ensure representative measurement of diverse sites, at distances of at least 20 km (12 mi) | Be capable of adequate mobility to ensure representative measurement of diverse sites, at distances of at least 10 km (6 mi) |
| *Science Capability* | |
| Accommodate the NASA-selected science payload, capable of definitively analyzing the mineralogy, chemistry, and isotopic composition of surface and near-surface materials, and assessing the biological potential of the landing site | Accommodate the NASA-selected science payload, capable of definitively analyzing the mineralogy, chemistry, and isotopic composition of surface and near-surface materials, and assessing the biological potential of the landing site |
| Be able to select, acquire, process, distribute, and analyze at least 74 samples of rock, rock fragments, and soil | Be able to select, acquire, process, distribute, and analyze at least 28 samples of rock, rock fragments, and soil |

## 2.1 DESCRIPTION OF THE PROPOSED ACTION (ALTERNATIVE 1)

The mission and spacecraft for the Proposed Action (Alternative 1) would be designed and developed to meet the full operational capabilities. The descriptions presented in this section are based on the information available at the time this DEIS was prepared. Should NASA make changes in the Proposed Action (Alternative 1) that are relevant to environmental concerns, NASA would evaluate the need for additional environmental documentation.

### 2.1.1 Mission Description

The MSL spacecraft (described in Section 2.1.2 below) would be launched from CCAFS onboard either an Atlas V or Delta IV class of expendable launch vehicles. The launch would occur within either a first 20-day launch period opening September 15, 2009 and closing October 4, 2009, or a second 20-day launch period opening October 19, 2009 and closing November 7, 2009. The mission cruise phase would begin when the spacecraft separates from the launch vehicle and would end prior to atmospheric entry at Mars. The cruise phase would last approximately 9 to 12 months, depending on the exact launch date, trajectory, and selected landing site.

The spacecraft's trajectory from Earth would be designed for a direct entry into the Martian atmosphere, without the spacecraft first entering into orbit about Mars. A final trajectory correction maneuver would be performed prior to separation of the cruise stage from the entry vehicle, and would occur from 20 to 40 minutes before atmospheric entry. The cruise stage would enter the Martian atmosphere and would break apart and burn up from friction and heating.

The arrival date at Mars would range from mid July 2010 to not later than mid October 2010. The arrival date at Mars is constrained by the need for real-time data transmission from the spacecraft during the critical entry, descent and landing operations so that fault reconstruction could be developed should a failure occur. This capability would be implemented most efficiently during the MSL mission via high data rate communication. A high-rate communication link would allow real-time transmission of all critical engineering data (*e.g.*, spacecraft position and orientation, and confirmation of deployment sequences). For the MSL mission, this could only be achieved by using a Mars orbiting spacecraft to relay transmissions to Earth because the small antennas on the entry vehicle would not support high-volume data transmissions. Direct transmission from the entry vehicle to Earth is possible during the entry, descent and landing operations, but the low data rate would only allow a radio signal tone to be transmitted without any of the critical engineering data. Direct transmission during this event would not have the real-time data capability and would therefore be used only in a backup capacity.

Arrival of the MSL spacecraft at Mars must therefore occur at a time when a Mars orbiting spacecraft is visible above the selected landing site. Figure 2-1 shows the Earth-Mars relative positions in orbit around the Sun, and the Mars solar longitude ($L_S$) for the range of arrival dates that would meet this condition. The transition from Winter to Spring in the Northern hemisphere on Mars defines zero degrees solar longitude ($L_S = 0°$). The range of MSL proposed arrival dates would coincide with Summer in the Northern hemisphere of Mars.

The Mars Reconnaissance Orbiter (MRO), which entered Mars orbit in March 2006, would be the primary high data rate communication relay spacecraft for the MSL arrival event and for subsequent rover surface operations. The constraints on launch dates and arrival conditions during the first 20-day launch period, including mutual visibility at arrival among the MSL spacecraft, the MRO spacecraft, and Earth, would limit arrival to specific dates between July 10, 2010 and September 14, 2010 ($L_S$ between approximately 120° and 150°), as depicted in Figure 2-2. The complex and continually

changing geometry among the positions of Earth and Mars in their orbits, the location of the MRO spacecraft in its orbit around Mars, and the approach angle of the MSL spacecraft's trajectory relative to Mars, would limit the available landing site latitudes during these arrival dates. For example, maintaining communication visibility with MRO during early arrival dates would limit landing site latitudes to between approximately 15° South and 45° North, whereas later arrival dates would limit available latitudes to between approximately 60° South to 50° South.

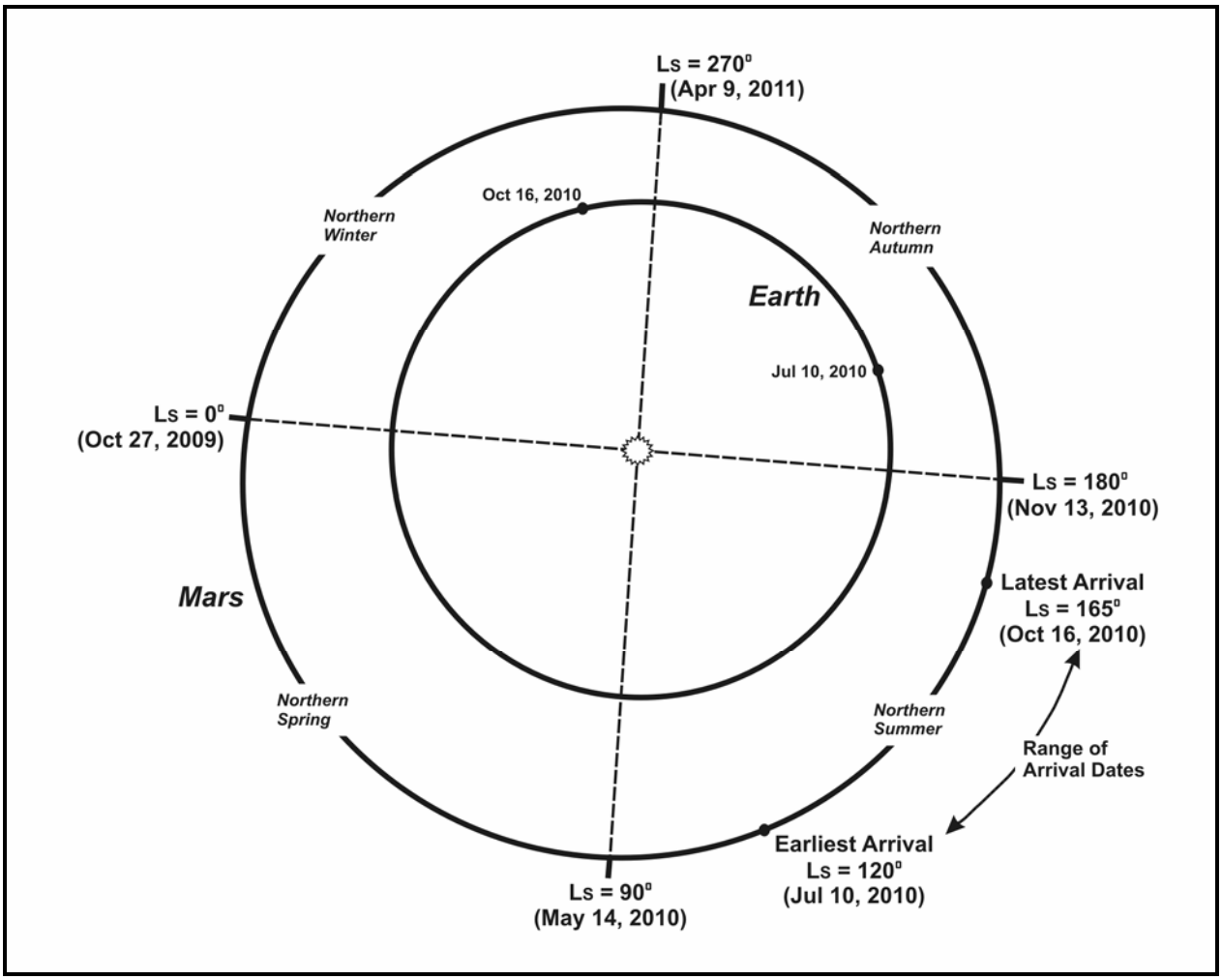


**FIGURE 2-1. ARRIVAL DATES FOR THE PROPOSED MSL MISSION**

Should launch of the MSL mission be delayed past October 4, 2009, the second 20-day launch period would become available beginning October 19, 2009[1]. Arrival dates would occur between August 25, 2010 and October 16, 2010 ($L_S$ between approximately 140° and 165°). After August 31, 2010, the MRO spacecraft would not

[1] Launch dates between October 5, 2009 and October 18, 2009 are not available because the geometry at arrival associated with these launch dates would not allow any communications from the MSL spacecraft during entry, descent and landing operations.

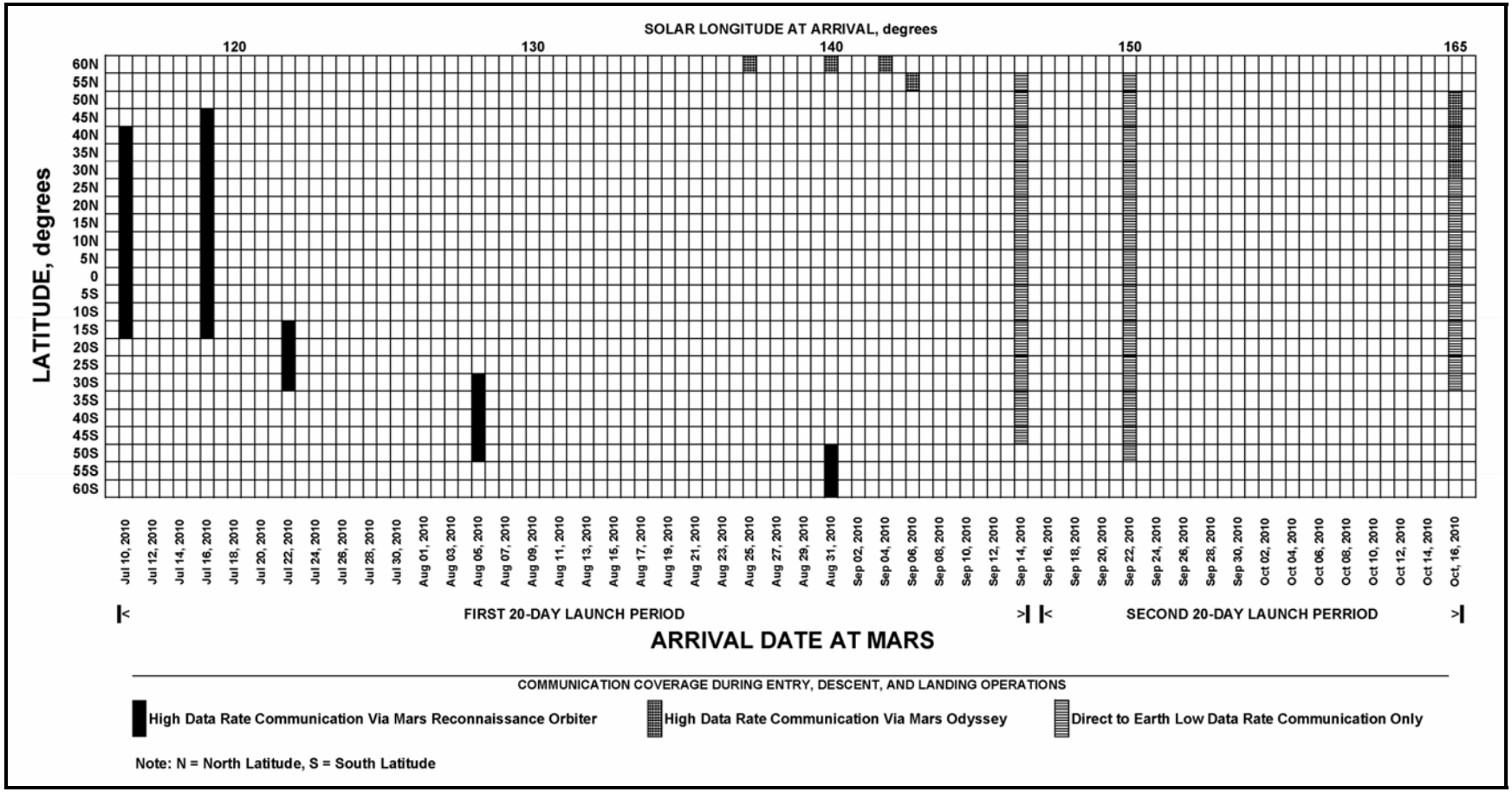


**FIGURE 2-2. MSL COMMUNICATION COVERAGE AT ARRIVAL**

be in a position to support high data rate communication from the MSL spacecraft during entry, descent and landing operations. The Mars Odyssey orbiter, which arrived at Mars in October 2001, would be available to support high data rate communication on specific dates during this arrival period. Maintaining communication visibility with Mars Odyssey during these arrival dates would limit available landing site latitudes to between approximately 30° North and 60° North, depending on the specific arrival date.

Low-rate data transmissions directly from the MSL spacecraft to Earth during entry, descent and landing operations would be available for specific arrival dates to supplement the high data rate links via either of the orbiting spacecraft. For other specific arrival dates, only direct to Earth, low data rate transmissions would be available. As noted earlier, however, real-time transmission of critical engineering data would not be possible, and not all desired data during entry, descent, and landing operations would be obtained. The line-of-sight angle between the spacecraft's antenna and the Earth is also an important consideration. The radio signal would degrade to unreliable levels for line-of-sight transmission angles greater than about 85°. After October 16, 2010 (approximately $L_S$ = 165°), direct communications from the spacecraft would not be possible during entry, descent, and landing operations because the line-of-sight transmission angle would be too large.

The exact landing site for the proposed MSL mission would be selected in 2008, about one year before the planned launch. A one-year lead time is required to allow the final details of the mission design, *e.g.*, the specific launch trajectory, to be determined. The site selection process would include a consensus recommendation by mission scientists, utilizing very detailed, high resolution images expected from the MRO mission and other available science data, on the most scientifically worthy location to land the rover. The selection process would also include NASA's engineering assessment of the rover's capabilities at the proposed site. NASA would then approve the selected site. The selected landing site would then factor into determination of the optimum launch and arrival dates for the mission, given the other constraints discussed above.

The entry, descent, and landing phase of the mission (Figure 2-3) would begin when the entry vehicle reaches an altitude of approximately 125 km (78 mi) above the surface of Mars, and would end with a soft touchdown of the rover on the Martian surface. The entry vehicle would use aero-maneuvering techniques during the early portion of atmospheric flight in order to reduce the landing site targeting errors that could result from pressure and density variations in the atmosphere.

Following parachute deployment, the heatshield would be released, the rover's mobility system deployed, and the landing radar initiated. The descent stage and rover would be released from the backshell about 600 meters (m) (1,970 feet (ft)) above the surface and the terminal descent engines would be fired to slow the descending vehicle. At 20 m (66 ft) above the landing site, the rover would be lowered from the descent stage on tether/umbilical lines for a wheels-down soft landing on the Martian surface, called the "skycrane" phase of the landing sequence (Figure 2-4). The exact landing site is expected to be within a circular area with a radius of 10 km (6.2 mi). The tether/umbilical lines connecting the descent stage and the rover would be released,

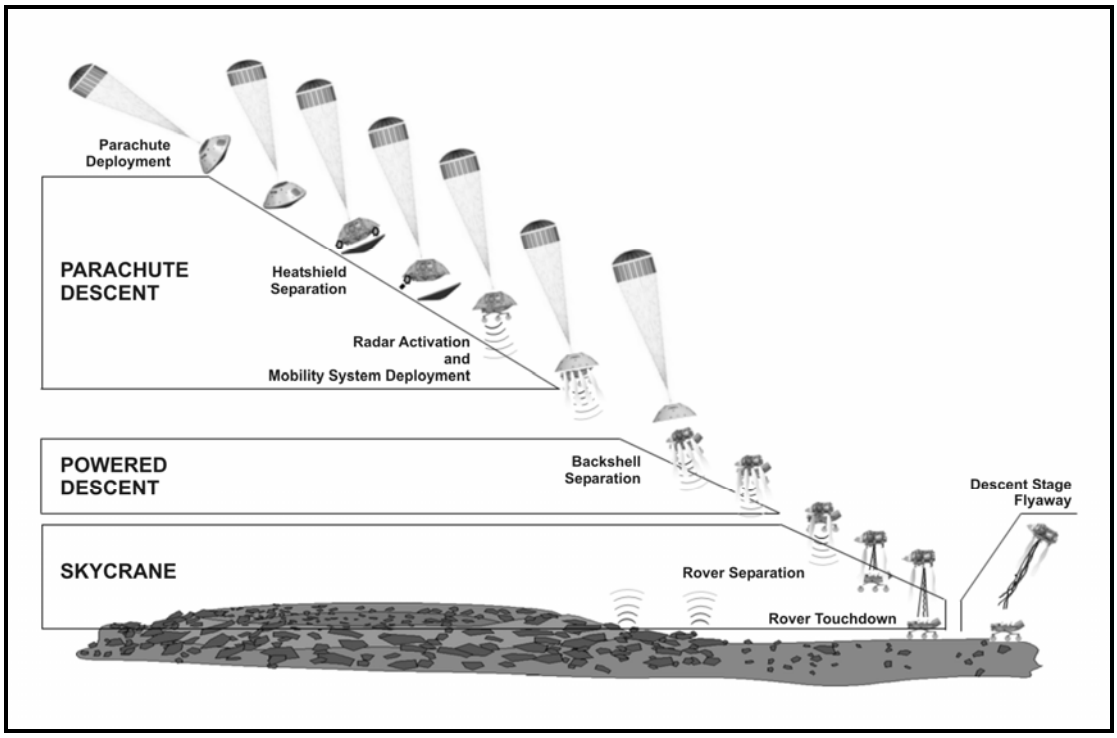


**FIGURE 2-3. ENTRY, DESCENT AND LANDING PHASE**

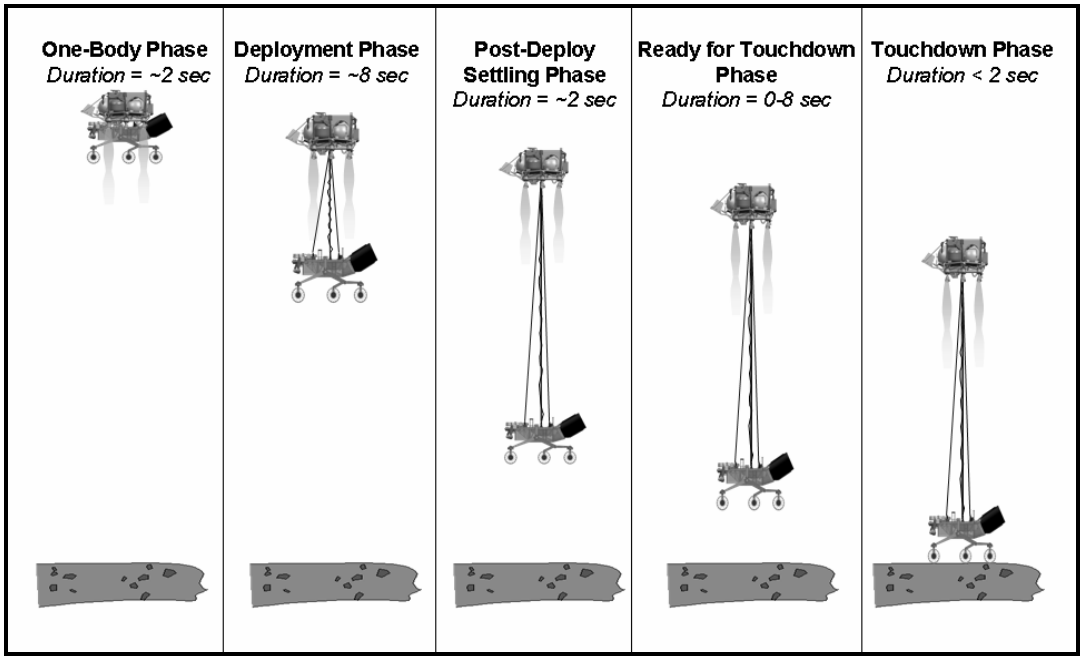


**FIGURE 2-4. FINAL LANDING SEQUENCE (SKYCRANE PHASE)**

and the descent stage with the tether/umbilical lines attached would perform a fly-away maneuver to a hard landing a safe distance from the rover.

After landing, primary surface operations would commence and last for approximately one Martian year, which is 670 sols[2] or 687 Earth days. The landed mission would begin with the critical rover deployments, rover health checks, and establishment of communications with Earth. Critical deployments include the high gain antenna, remote sensing mast, and release of launch lock restraints on the robotic arms. After deployment of the remote sensing mast, the rover would image the landing site. Science instrument health checks would be included in the subsequent early surface operations activities.

NASA has determined that data from at least 28 distinct samples (the minimum operational science capability) would be necessary to adequately characterize the local environment, but that data from at least 74 samples (the full operational science capability) would be needed to yield a scientifically significant sample set that would fulfill the science objectives discussed in Chapter 1. Current planning for the baseline rover science mission is therefore based on acquiring and analyzing at least 74 diverse rock and soil samples.

Scenarios for the rover's surface science operations are still being planned and evaluated by MSL mission scientists and engineers. The final details of the scenario would depend upon factors such as the actual capabilities of the rover, when finally assembled and tested, and the selected landing site. Surface operations would also be adaptable to actual conditions on the surface of Mars and discoveries made during the course of the rover's mission. The general features of a typical operational scenario timeline are described below.

After the rover has landed and established its initial functionality, it would be commanded to survey the vicinity of the landing site. Mission scientists on Earth would determine which nearby rocks and soil areas would be the most interesting for sampling and analysis. The rover would then approach the first selected rock or soil area target and obtain close-up images that scientists would use to decide which spot to examine more closely. The rover would then acquire and analyze the sample from the spot on the rock or soil area and then move to the next rock or soil area of interest. Seven rock or soil samples would be acquired and analyzed in the vicinity of the landing site. Current planning estimates assume the rover would take about 50 sols to establish operational capabilities, survey the landing site, and acquire the first seven samples. Other science experiments, presented in Section 2.1.2, would also be performed during this period.

An average of 10 samples would then be collected from each of six more locations, within several kilometers of the landing site, where science operations would be performed. Seventy sols are currently estimated for collecting samples at each science location. An additional six sols are allocated for science location surveying, yielding a

[2] 1 sol = 1 Martian day = 24 hours, 37 minutes = 1.026 Earth days.

current planning estimate of 76 sols for rover operations at each science location other than the landing site.

The rover is currently assumed to take an average of 15 sols to move from one science location to the next. The time required for the rover to travel, or traverse, from one location to the next would depend on the rover's capabilities, the surface conditions it encounters, and the distance. Since there would be six traverse segments between the seven science locations (the initial science location is the landing site), the rover would use about 90 sols for moving to all science locations. A planning contingency is included because of the preliminary nature of the surface operations planning activities. Therefore, the total landed science operations time for the proposed MSL baseline mission would be as follows.

| Rover Activity | Time |
|---|---|
| Science Observations (7 locations) | 506 sols |
| Location Traverses (6 traverses) | 90 sols |
| Planning Contingency | 79 sols |
| Total Duration | 675 sols |

Assuming a similar operational scenario timeline, achieving the minimum science capability of acquiring and analyzing 28 samples could be accomplished within about 280 sols (about 42 percent of one Mars year). This would include seven samples collected from the vicinity of the landing site over a period of about 50 sols, 10 or 11 samples collected from two additional science locations over periods of about 76 sols at each location, a total of about 30 sols for traversing among the three science locations, and 48 sols of planning contingency.

### 2.1.2 Spacecraft Description

The MSL spacecraft flight system would consist of a cruise stage, an entry vehicle, a descent stage, and the science rover. The flight system, illustrated in Figure 2-5, is currently estimated to weigh approximately 3,600 kilograms (kg) (7,940 pounds (lb)).

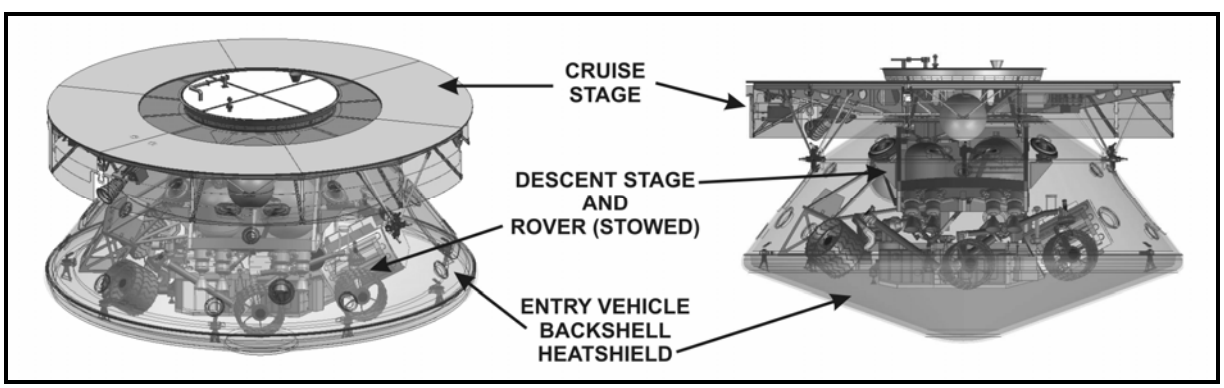


**FIGURE 2-5. ILLUSTRATION OF THE PROPOSED MSL FLIGHT SYSTEM**

The cruise stage, approximately 4.4 m (14.4 ft) in diameter, would provide the services necessary to support the trip to Mars. These services would include communications with Earth and provision of electrical power to the entry vehicle via a 6.8 square meter (73.2 square feet) solar array. Attitude control and trajectory correction maneuvers would be performed via a spin-stabilized hydrazine propellant system. Two titanium propellant tanks would contain approximately 80 kg (176 lb) of hydrazine.

The entry vehicle, approximately 4.5 m (14.8 ft) in diameter, would contain the systems that would safely enter the Martian atmosphere and deliver the rover to its designated landing site. The entry vehicle would include a heatshield and backshell, a supersonic parachute deployed by a mortar, and the stowed descent stage and rover.

The descent stage, illustrated in Figure 2-6, would provide the systems needed to guide, decelerate, hover and lower the rover onto its designated landing site. The descent stage would contain three hydrazine tanks made of titanium and two helium pressure vessels made of composite material. The total propellant load for the descent stage would be about 250 kg (551 lb) of hydrazine.

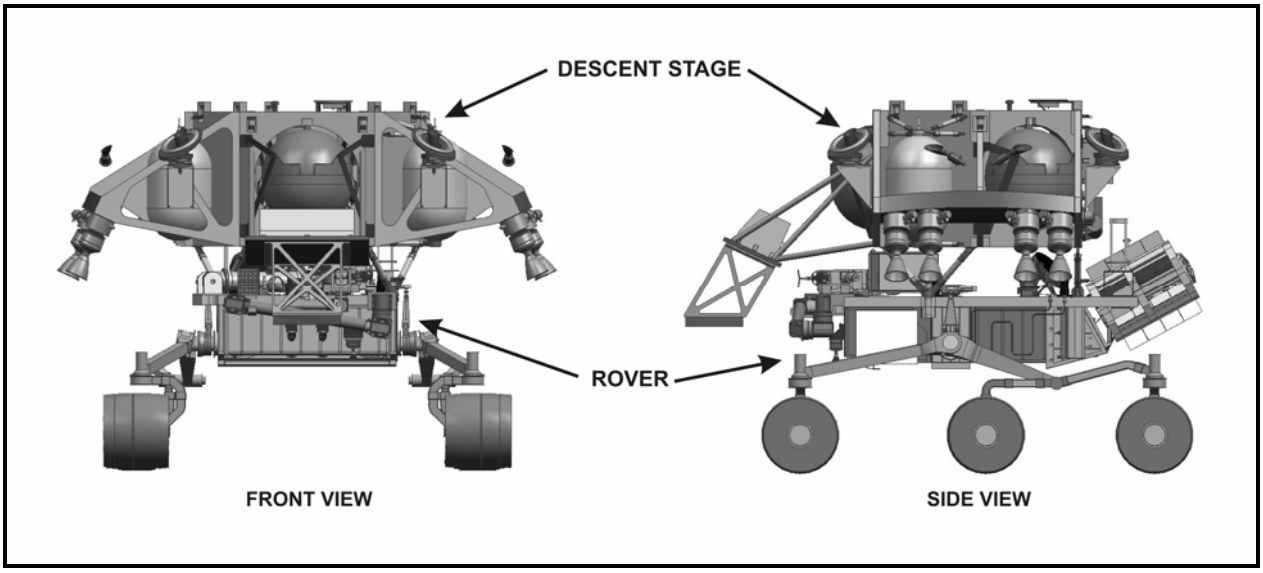


**FIGURE 2-6. ILLUSTRATION OF THE MSL DESCENT STAGE AND PROPOSED MSL ROVER**

The rover, illustrated in Figure 2-7, would be made from an all-aluminum primary structure with machined panels. The thermal enclosure would contain the avionics and communication systems. The mobility system would connect to the rover chassis. The rover would be designed to accommodate a payload module that would contain the analytical instruments and the sample acquisition arm. The rover would also support a remote sensing mast that would provide an elevated platform for critical engineering and scientific assets such as navigation imaging cameras, science imaging cameras, remote sensing instruments, and a meteorology instrument.

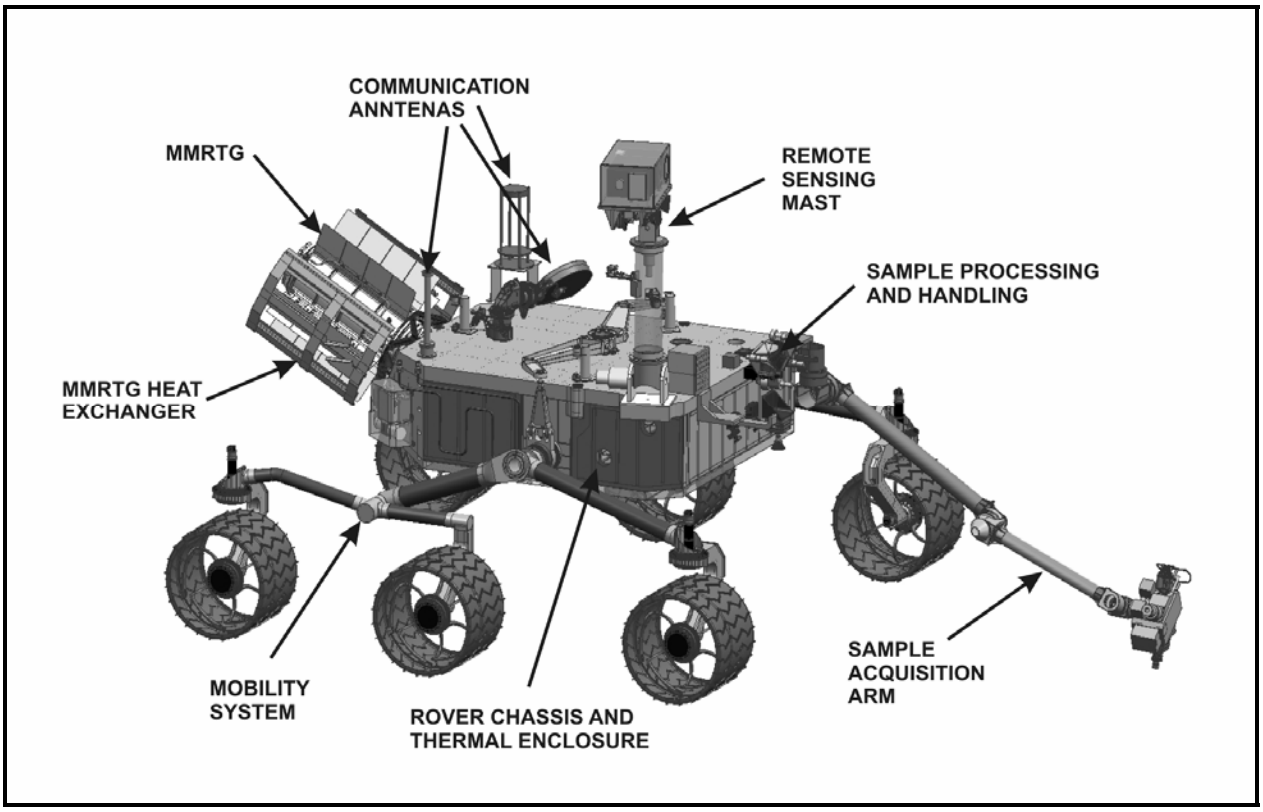


**FIGURE 2-7. ILLUSTRATION OF THE PROPOSED MSL ROVER**

The science instruments planned for the MSL mission were selected by NASA through a competitive process (NASA 2004b) to meet the science objectives summarized in Chapter 1. The function and objectives of each instrument are summarized in Table 2-2, and the planned location of each instrument on the rover is shown in Figure 2-8.

Two of the rover science instruments, the Alpha Particle X-ray Spectrometer (APXS) and the Dynamic Albedo of Neutrons (DAN), would each use small quantities of radioactive material for instrument calibration or science experiments. The isotope and planned quantity of each source is listed below.

| Instrument | Radioisotope | Activity, curies |
|---|---|---|
| APXS | curium-244 | 0.030 |
| | cadmium-109 | 0.105 |
| DAN | tritium (hydrogen-3) | 2 |

## TABLE 2-2. MSL SCIENCE INVESTIGATIONS

| Instrument | Description and Objectives |
|---|---|
| Mast Camera (MastCam) | The MastCam instrument, mounted on the Remote Sensing Mast, would consist of a pair of multi-spectral zoom cameras, separated from each other to permit acquisition of stereo images. The principal function of this instrument would be to observe geological structures and features in and around the rover. These observations would contribute to characterization and determination of the history and processes recorded in geologic materials at the MSL site. MastCam images would also provide: backup for navigational purposes; images to the project for choosing samples and outcrops to be studied in greater detail; images for characterization of samples, images of sample acquisition, processing and handling inputs, outputs, and intermediate products; and other images that might be necessary or desired to assist in operations, sample selection, or interpretation of samples analyzed by other instruments. |
| Laser-Induced Remote Sensing For Chemistry And Micro-Imaging (ChemCam) | The ChemCam instrument would combine laser-induced breakdown spectroscopy with a remote micro-imager that provides images of the target. It would provide elemental analysis of spatially resolved solid samples at distances of 1.5 to 9 meters (5 to 30 feet). ChemCam's primary objective is to determine the chemical composition of rocks and soils in order to characterize the materials in the vicinity of the rover and thereby to contribute to understanding rock and soil types and the processes by which they formed. Additionally, ChemCam's ability to observe structures and features using the remote microscopic imager and analyze samples at a distance would provide critical information for choosing where to send the rover and for choosing samples to be further studied by the suite of contact instruments and to be sampled for analysis by the CheMin and SAM instruments. |
| Mars Hand Lens Imager (MAHLI) | The MAHLI instrument would be a camera mounted on the Robotic Arm with the capability to provide close-up color images of rocks and soils. Its primary objective would be to provide data on the petrography and mineralogy of these materials, which would be critical for describing them and for deciphering the processes they have undergone. Additionally, images from the MAHLI instrument would be used to choose and characterize samples for analysis by the ChemMin and SAM instruments. |
| Alpha Particle X-Ray Spectrometer (APXS) | The APXS instrument would utilize particle induced X-ray emission and X-ray fluorescence techniques to determine chemical compositions of rock surfaces (either fresh or abraded and brushed) and crushed rocks and soils. The APXS's primary objective is to determine the chemical composition of rocks and soils in order to characterize the materials in the vicinity of the rover and thereby to contribute to understanding rock and soil types and the processes by which they formed. Additionally, results from the APXS would play a role in evaluating and characterizing materials to be sampled for analysis by the CheMin and SAM instruments. |
| X-Ray Diffraction/X-Ray Fluorescence Instrument (CheMin) | The CheMin instrument would utilize a combination of X-ray powder diffraction and X-ray fluorescence techniques. The primary objective of this investigation would be to detect, identify, and determine the abundances of mineral phases and determine the chemical composition of powdered samples introduced to the instrument. |

## TABLE 2-2. MSL SCIENCE INVESTIGATIONS (Continued)

| Instrument | Description and Objectives |
|---|---|
| Radiation Assessment Detector (RAD) | The RAD instrument would be an energetic particle spectrometer designed to characterize the energetic particle spectrum at the surface of Mars. It would measure relevant charged particle species and secondary neutrons generated in the atmosphere and soil. |
| Mars Descent Imager (MARDI) | The MARDI instrument would be a body-mounted, downward pointing camera designed to return high-resolution, color, high-frame-rate images during the descent and landing phase. Data acquired and returned by the MARDI investigation would be utilized by the mission operations team in planning initial activities prior to landing. |
| Sample Analysis at Mars (SAM) | The SAM experiment would be an integrated set of three instruments: a neutral gas quadrupole mass spectrometer (QMS); a multiple column gas chromatograph (GC); and a tunable laser spectrometer (TLS). Integral to this instrument suite are three support systems: a chemical separation and processing system; a high throughput, wide range pump system; and a sample manipulation system. The primary objectives of this investigation would be to investigate the abundance, structure, and chemical state of carbon-bearing compounds at the Martian surface; to determine the concentrations of selected light elements and volatiles (including noble gases) in rocks and gases collected on the Martian surface; and to determine selected isotopic ratios in these materials. The GC's six columns would separate complex mixtures of organic molecules extracted from rocks and soils into their molecular components. Its detectors would provide backup for the more sensitive QMS measurements. The QMS would be used to analyze samples of the Martian atmosphere and gases thermally evolved from solid samples; it would also serve as the primary detector for the gas chromatograph. The TLS would measure the abundances of methane, water, carbon dioxide, carbon monoxide, carbonyl sulfide, and hydrogen peroxide in gases. |
| Dynamic Albedo of Neutrons (DAN) | The DAN instrument would determine the time-variable dynamic albedo of thermal and epithermal neutrons interacting with the Martian surface. Neutron pulses would be emitted by a pulsing neutron generator mounted on the rover and reflected neutrons will be detected. Measurements would be made both at various rover locations to determine variations in hydrogen content and to determine possible layering structure of hydrogen-bearing materials in the subsurface as functions of position. |
| Rover Environmental Monitoring Station (REMS) | The REMS instrument would be an integrated system designed to characterize weather and other aspects of the near-surface environment at the location of the rover. Its primary objectives would be to measure air and surface temperature, horizontal and vertical wind speed, and humidity from a boom approximately 2 meters (6.5 feet) above the surface; it would also measure surface pressure and incident ultraviolet radiation. The sensors would generally be sampled hourly for several minutes over the life of the mission. In addition to their value in understanding Martian meteorology, the results would be used to help understand the environment in which the other instruments and the rover would be performing their tasks. |

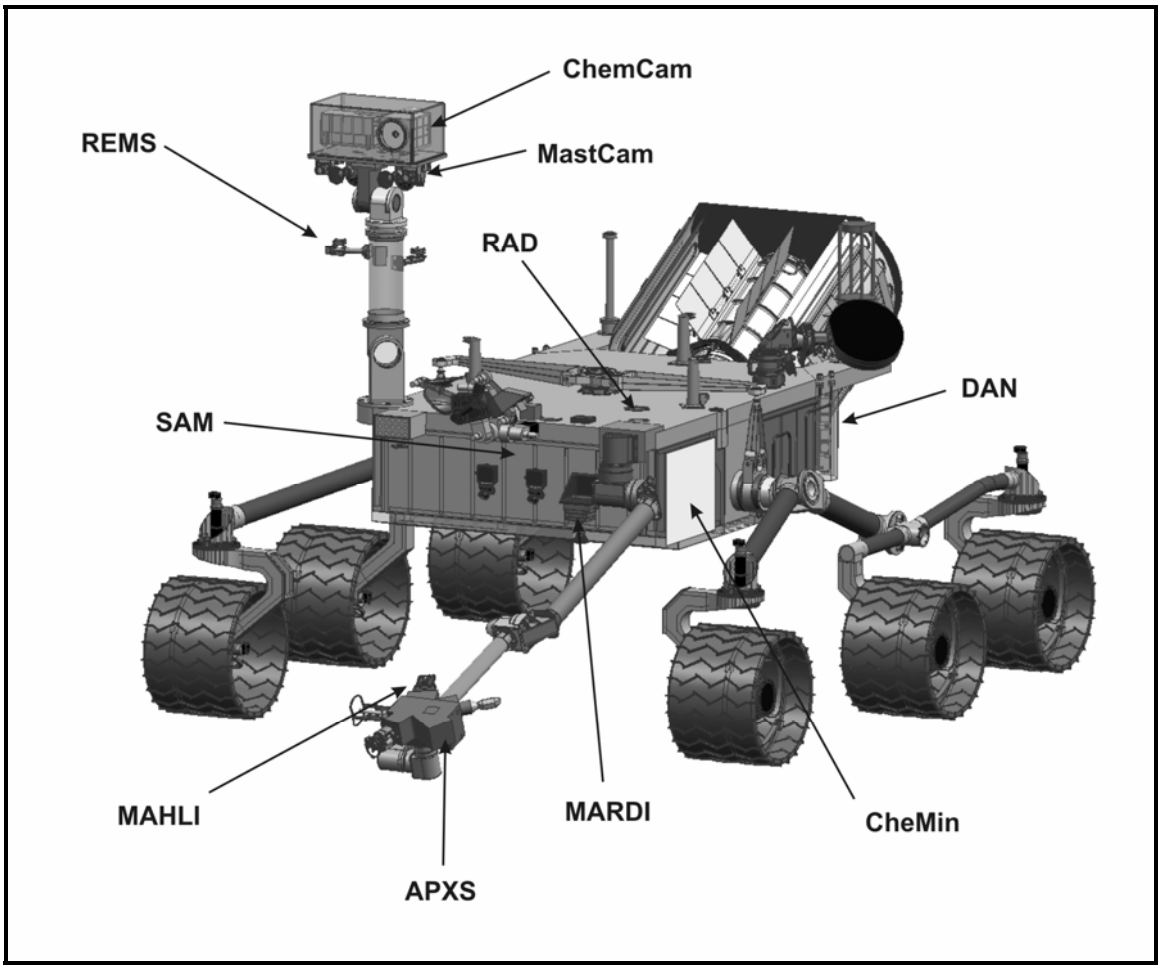


**FIGURE 2-8. ILLUSTRATION OF THE SCIENCE INSTRUMENT LOCATIONS ON THE PROPOSED MSL ROVER**

### 2.1.3 Rover Electrical Power

The proposed MSL rover would use a Multi-Mission Radioisotope Thermoelectric Generator (MMRTG), provided to NASA by the U.S. Department of Energy (DOE), as the source of electrical power for its engineering subsystems and science payload.

An MMRTG (Figure 2-9) converts heat from the radioactive decay of plutonium (in a ceramic form called plutonium dioxide ($PuO_2$) consisting mostly of plutonium-238) into usable electrical power. RTGs were used on 26 previously-flown United States space missions (Table 2-3), including six Apollo flights, and the Pioneer, Viking, Voyager, Galileo, Ulysses, Cassini, and New Horizons missions. Radioisotope power source technology development has resulted in several RTG configurations, evolving from the Systems for Nuclear Auxiliary Power (SNAP)-RTG through the Multi-Hundred Watt (MHW)-RTG to the General Purpose Heat Source (GPHS)-RTG used for the New Horizons mission to Pluto. The MMRTG is designed for applications both in the vacuum of deep space and on the surface of bodies with an atmosphere, such as Mars.

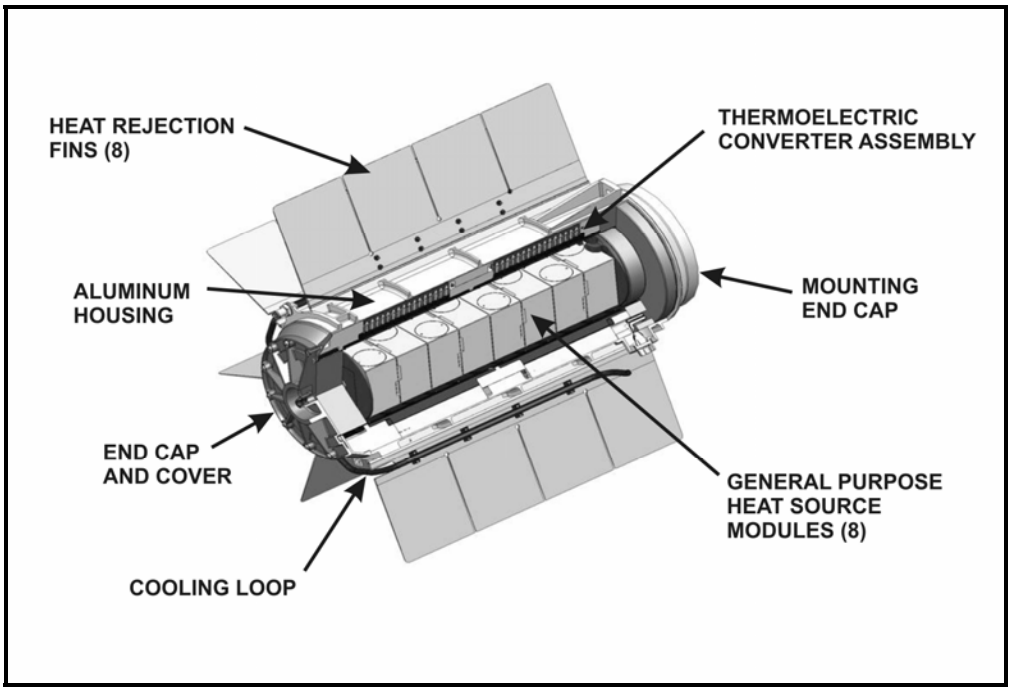


Source: DOE

**FIGURE 2-9. ILLUSTRATION OF A MULTI-MISSION RADIOISOTOPE THERMOELECTRIC GENERATOR**

Development of the MMRTG has been documented in NASA's *Draft Programmatic Environmental Impact Statement for the Development of Advanced Radioisotope Power Systems* (NASA 2005c). NASA is currently completing its environmental review of this development activity and is expected to issue a Final Programmatic Environmental Impact Statement in mid-summer 2006 followed by a Record of Decision by early Autumn 2006. Planning for use of the MMRTG in the Proposed Action (Alternative 1) is contingent upon a decision by NASA to complete development of the MMRTG.

The heat source assembly of the MMRTG consists of eight GPHS modules, an isolation liner, and end components. Each GPHS module (Figure 2-10) has dimensions of approximately 9.3 by 10.0 by 5.8 centimeters (cm) (3.7 by 3.9 by 2.3 inches (in)), a mass of about 1.6 kg (3.5 lb), and would contain about 0.6 kg (1.3 lb) of $PuO_2$ (DOE 2006a). A GPHS module consists of a graphite aeroshell, two carbon-bonded carbon fiber insulator sleeves, two graphite impact shells (GIS), and four iridium clads, each of which contains ceramic pellets of $PuO_2$.

The total radiological inventory for the MMRTG would be about 4.8 kg (10.6 lb) of $PuO_2$ with a total activity of about 58,700 curies (Ci). Plutonium (Pu) can exist in a number of different radioactive isotopic forms. The principal plutonium isotope in the fuel, in terms of mass and total activity, is Pu-238. Table 2-4 provides representative characteristics and the isotopic composition of the $PuO_2$ in the MMRTG (DOE 2006a). Plutonium dioxide has a density of 9.6 grams per cubic centimeter (5.5 ounces per cubic inch), melts at 2,400 degrees Celsius (°C) (4,352 degrees Fahrenheit (°F)), and boils at 3,870°C (6,998°F).

## TABLE 2-3. UNITED STATES SPACE MISSIONS INVOLVING RADIOISOTOPE POWER SOURCES

| Power Source (number of RPSs) | Spacecraft | Mission Type | Launch Date | Status | Activity at Launch (curies) |
|---|---|---|---|---|---|
| SNAP-3B7 (1) | TRANSIT 4A | Navigational | Jun 29, 1961 | Currently in Earth orbit | 1,500 – 1,600 |
| SNAP-3B8 (1) | TRANSIT 4B | Navigational | Nov 15, 1961 | Currently in Earth orbit | 1,500 – 1,600 |
| SNAP-9A (1) | TRANSIT 5BN-1 | Navigational | Sep 28, 1963 | Currently in Earth orbit | 17,000 |
| SNAP-9A (1) | TRANSIT 5BN-2 | Navigational | Dec 5, 1963 | Currently in Earth orbit | 17,000 |
| SNAP-9A (1) | TRANSIT 5BN-3 | Navigational | Apr 21, 1964 | Mission aborted; RPS burned up on reentry as designed | 17,000 |
| SNAP-19B2 (2) | NIMBUS-B-1 | Meteorological | May 18, 1968 | Mission aborted; RPS retrieved intact | 34,400 |
| SNAP-19B2 (2) | NIMBUS III | Meteorological | Apr 14, 1969 | Currently in Earth orbit | 37,000 |
| SNAP-27 (1) | APOLLO 12 | Lunar | Nov 14, 1969 | ALSEP [(a)] shut down and remains on lunar surface | 44,500 |
| SNAP-27 (1) | APOLLO 13 | Lunar | Apr 11, 1970 | Mission aborted on way to moon; Lunar Module was successfully targeted to the Tonga Trench in the Pacific Ocean for safe disposal of the ALSEP power source | 44,500 |
| SNAP-27 (1) | APOLLO 14 | Lunar | Jan 31, 1971 | ALSEP shut down and remains on lunar surface | 44,500 |
| SNAP-27 (1) | APOLLO 15 | Lunar | Jul 26, 1971 | ALSEP shut down and remains on lunar surface | 44,500 |
| SNAP-19 (4) | PIONEER 10 | Planetary | Mar 2, 1972 | Successfully operated to Jupiter and beyond | 80,000 |
| SNAP-27 (1) | APOLLO 16 | Lunar | Apr 16, 1972 | ALSEP shut down and remains on lunar surface | 44,500 |
| TRANSIT-RTG (1) | TRIAD-01-1X | Navigational | Sep 2, 1972 | Currently in Earth orbit | 24,000 |
| SNAP-27 (1) | APOLLO 17 | Lunar | Dec 7, 1972 | ALSEP shut down and remains on lunar surface | 44,500 |
| SNAP-19 (4) | PIONEER 11 | Planetary | Apr 5, 1973 | Successfully operated to Jupiter, Saturn and beyond | 80,000 |
| SNAP-19 (2) | VIKING 1 | Planetary | Aug 20, 1975 | Lander shut down and remains on surface of Mars | 41,000 |
| SNAP-19 (2) | VIKING 2 | Planetary | Sep 9, 1975 | Lander shut down and remains on surface of Mars | 41,000 |
| MHW-RTG (2) | LES 8 | Communications | Mar 14, 1976 | Successfully operating in Earth orbit | 159,400 |
| MHW-RTG (2) | LES 9 | Communications | Mar 14, 1976 | Successfully operating in Earth orbit | 159,400 |
| MHW-RTG (3) | VOYAGER 2 | Planetary | Aug 20, 1977 | Successfully operated to Neptune and beyond | 240,000 |
| MHW-RTG (3) | VOYAGER 1 | Planetary | Sep 5, 1977 | Successfully operated to Saturn and beyond | 240,000 |
| GPHS-RTG (2) | GALILEO | Planetary | Oct 18, 1989 | Successfully operated in Jupiter orbit; after 8 years, spacecraft purposefully entered Jupiter's atmosphere | 269,000 [(b)] |
| GPHS-RTG (1) | ULYSSES | Planetary | Oct 6, 1990 | Successfully operating in heliocentric orbit | 132,500 |
| GPHS-RTG (3) | CASSINI | Planetary | Oct 15, 1997 | Successfully operating in Saturn orbit | 404,000 [(b)] |
| GPHS-RTG (1) | NEW HORIZONS | Planetary | Jan 19, 2006 | Successfully operating in flight to Pluto | 121,000 |

(a) Apollo Lunar Surface Experiments Package.
(b) Includes inventory from Radioisotope Heater Units.
Note: The proposed Mars Science Laboratory mission would use one MMRTG with approximately 58,700 curies.

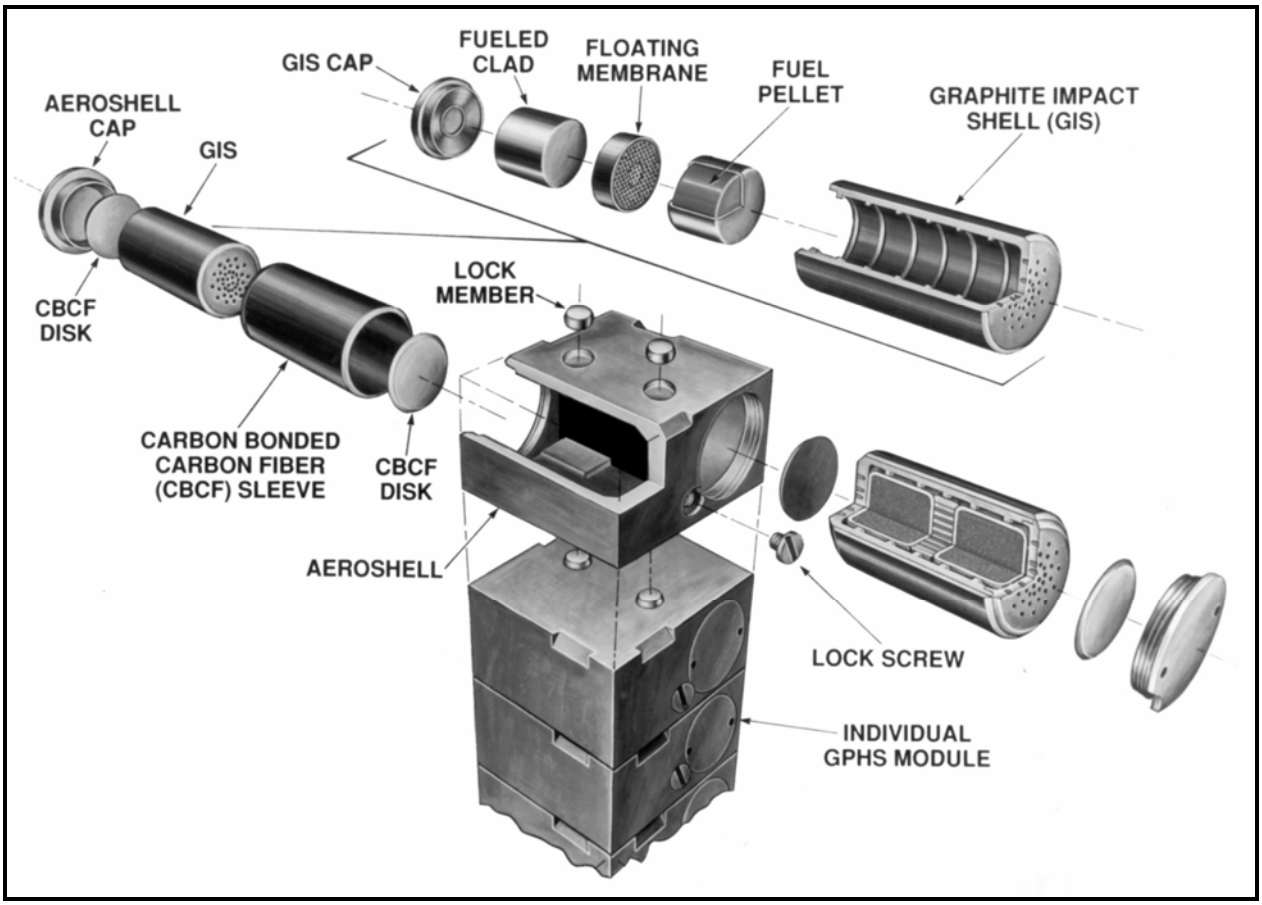


Source: DOE

**FIGURE 2-10. ILLUSTRATION OF A GENERAL PURPOSE HEAT SOURCE MODULE**

The DOE designed the MMRTG to provide for containment of the $PuO_2$ fuel to the extent feasible during all mission phases, including ground handling, launch, and unplanned events such as reentry, impact, and post-impact situations. Under normal, accident, and post-accident conditions the safety-related design features of the MMRTG to be used for the MSL mission are intended to:

- minimize the release and dispersion of the $PuO_2$ fuel, especially of biologically significant, small, respirable particles;
- minimize land, ocean and atmosphere contamination, particularly in populated areas; and,
- maximize long-term immobilization of the $PuO_2$ fuel following postulated accidents.

## TABLE 2-4. TYPICAL ISOTOPIC COMPOSITION OF AN MMRTG

| Fuel Component | Weight Percent | Half-Life, years | Specific Activity, curies/gram | Total Activity [(a)], curies |
|---|---|---|---|---|
| Plutonium | 83.63 | | | |
| Pu–236 | 0.0000011 | 2.851 | 531.3 | 0.283 |
| Pu–238 | 69.294 | 87.7 | 17.12 | 57,323 |
| Pu–239 | 12.230 | 24,131 | 0.0620 | 36.64 |
| Pu–240 | 1.739 | 6,569 | 0.2267 | 19.05 |
| Pu–241 | 0.270 | 14.4 | 103.0 | 1,343 |
| Pu–242 | 0.0955 | 375,800 | 0.00393 | 0.0181 |
| Actinide Impurities | 4.518 | NA | NA | 20.5 |
| Oxygen | 11.852 | NA | NA | NA |
| **Total** | **100.00** | **NA** | **NA** | **58,742** |

Source: DOE 2006a

(a) Based on 4.8 kg (10.6 lbs) of $PuO_2$.
NA = Not Applicable

Safety design features of the MMRTG include the following.

- Thermoelectric Converter: The MMRTG is designed to release the individual GPHS modules in case of inadvertent reentry in order to minimize module terminal velocity and the potential for fuel release on Earth impact. The converter housing is made of aluminum alloy to ensure melting and breakup of the converter upon reentry, resulting in release of the modules.
- GPHS Module, GIS and related graphite components: The GPHS module and its graphite components are designed to provide reentry and surface impact protection to the iridium fueled clad in case of accidental sub-orbital or orbital reentry. The aeroshell and GIS are composed of a three-dimensional carbon-carbon Fine Weave Pierced Fabric, developed originally for reentry nose cone material. The aeroshell construction has been recently modified by the DOE to include thicker module walls and additional graphite material separating the GISs in order to increase the module's strength and enhance its performance under impact and reentry conditions (DOE 2006a).
- Iridium Clads: The iridium clad material is chemically compatible with the graphite components of the GPHS module and the $PuO_2$ fuel over the operating temperature range of the MMRTG. The iridium has a high melting temperature (2,443°C (4,430°F)) and exhibits excellent impact response.
- $PuO_2$ Fuel: The $PuO_2$ fuel has a high melting temperature (2,400°C ((4,352°F)), is very insoluble in water, and fractures into largely non-respirable chunks upon impact.

DOE has over 25 years experience in the engineering, fabrication, safety testing, and evaluation of GPHS modules, building on the experience gained from previous heat source development programs and an information base that has grown since the 1950s.

The MMRTG and enhanced GPHS module are still in development[3]. Even though formal safety testing has not taken place, much insight has been gained by examining the safety testing performed on the earlier GPHS-RTG and its components. The GPHS-RTG with 18 GPHS modules has been used on the Galileo, Ulysses, Cassini, and New Horizons missions. Formal safety testing of GPHS-RTG components have established a data base that allows prediction of responses in accident environments. These safety tests have covered responses to the following environments:

- impact from fragments;
- other mechanical impacts;
- thermal energy;
- explosive overpressure; and
- reentry conditions (*i.e.*, aerodynamic loads and aerodynamic heating).

### 2.1.4 Spacecraft Processing

The MSL spacecraft would be designed, fabricated, integrated and tested at facilities of the spacecraft provider, the Jet Propulsion Laboratory (JPL), which is managed for NASA by the California Institute of Technology in Pasadena, CA. These facilities have been used extensively in the past for a broad variety of spacecraft, and no new facilities would be required for the MSL spacecraft. JPL would deliver the spacecraft to NASA's Kennedy Space Center (KSC) in Florida for further testing and integration with the MMRTG and with the launch vehicle.

The spacecraft would be received at the KSC Payload Hazardous Servicing Facility (PHSF). The spacecraft would be inspected and comprehensive tests would be performed, including flight and mission simulations. The MMRTG would be delivered by DOE to a KSC storage facility. Once the spacecraft tests are completed, the MMRTG would be moved to the PHSF where it would be fitted to the rover for a pre-flight systems check. After completing these checks, the MMRTG would be returned to storage. The spacecraft would then be fueled with a total of about 330 kg (728 lb) of hydrazine, the currently estimated propellant load required for the cruise stage and descent stage.

A systems check and other tests would then be performed, after which the spacecraft would be enclosed within the launch vehicle payload fairing (PLF). The PLF, containing the spacecraft, would then be transported from the PHSF to the launch complex at CCAFS and would be attached to vehicle's second stage. The aft end of the PLF would

[3] The MMRTG flight unit is planned to be available in time for the Proposed Action (Alternative 1) (NASA 2005c).

be sealed with a barrier and connected to an environmental control system to prevent contamination during transit.

After the MSL spacecraft and its launch vehicle have been integrated at CCAFS, the MMRTG would be transported to the launch complex where it would be installed on the rover through special access panels in both the launch vehicle PLF and the entry vehicle aeroshell. MMRTG handling at KSC and CCAFS would be performed under stringent conditions following all requirements governing the use of radioactive materials. Transportation of the MMRTG between KSC and CCAFS would be in accordance with applicable U.S. Department of Transportation and other Federal, State, and local regulations (NASA 2001).

### 2.1.5 Representative Launch Vehicle Configurations for the MSL Mission

Early in the development process for the proposed MSL mission, NASA released a Request for Launch Service Proposal (RLSP) to all NASA Launch Service (NLS) approved contractors. The RLSP contained a statement of work and requested that proposals be submitted to NASA for the MSL mission. Once the proposals were received from the NLS contractors, NASA's Launch Service Task Order (LSTO) board evaluated them in accordance with LSTO procedures and previously determined technical evaluation criteria. Upon completion of the evaluation, NASA determined that the proposed configuration of the Atlas V launch vehicle would meet all the specified mission requirements and would present the best value to the government.

The evaluations of potential environmental consequences for this DEIS, summarized in Section 2.5 below and presented in more detail in Chapter 4, were prepared before NASA selected the launch vehicle for the proposed MSL mission. These evaluations were based upon representative configurations of the Atlas V and Delta IV vehicles that would have the performance capabilities necessary for the mission. The representative launch vehicle configurations are described in the following sections.

#### 2.1.5.1 Description of the Atlas V 541 Launch Vehicle

The Atlas family of launch vehicles, provided by International Launch Services, Inc. and Lockheed Martin Corporation (ILS-LM) (a NLS approved contractor), has evolved through various government and commercial programs from the first research and development flight in 1957 through the Atlas II, III, and V configurations. Versions of Atlas vehicles have been built specifically for both robotic and human space missions. The most recent version, the Atlas V, is currently available in 400 and 500 series configurations.

The representative Atlas V configuration for the proposed MSL mission is the Atlas V 541, which would consist of a liquid propellant first stage with four strap-on solid rocket boosters (SRB), a liquid propellant Centaur second stage, the MSL spacecraft, and the PLF. The "541" designation denotes a 5-m PLF, four SRBs, and a single-engine Centaur. The SRBs are attached to the first stage, and the Centaur is mounted atop the first stage. The MSL spacecraft would be mounted atop the Centaur. The PLF encloses and protects the spacecraft. The Atlas V, depicted in Figure 2-11, is approximately 62.4 m (205 ft) in height (ILS-LM 2004).

#### 2.1.5.1.1 First Stage

The Atlas V first stage is constructed mostly of aluminum and composite material, and is about 3.8 m (12.5 ft) in diameter and about 32.5 m (107 ft) in length. The first stage is powered by a liquid-fueled engine and contains about 284,089 kg (626,303 lb) of propellant. The fuel is rocket propellant-1 (RP-1), a thermally stable kerosene, and the oxidizer is liquid oxygen ($LO_2$). Each SRB is 1.5 m (5 ft) in diameter, 20 m (66 ft) in length, and is fueled with about 43,005 kg (94,809 lb) of solid propellant (consisting of ammonium perchlorate, aluminum, and hydroxyl-terminated polybutadiene (HTPB) binder) for a total propellant mass of about 172,020 kg (379,236 lb) for the four SRBs (ILS-LM 2004).

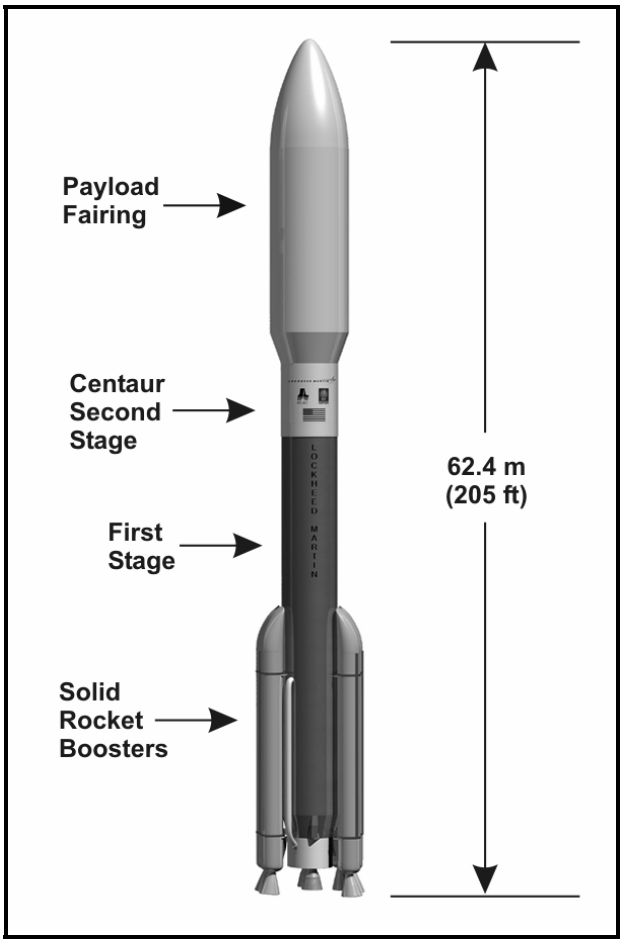


Source: Adapted from ILS-LM 2004

**FIGURE 2-11. ILLUSTRATION OF AN ATLAS V LAUNCH VEHICLE WITH SOLID ROCKET BOOSTERS**

#### 2.1.5.1.2 Centaur Second Stage

The Atlas V Centaur second stage is constructed of stainless steel and is about 3.1 m (10 ft) in diameter and about 12.7 m (42 ft) in length. The Centaur is powered by a single, cryogenic engine, and contains about 20,830 kg (45,922 lb) of propellant, consisting of liquid hydrogen ($LH_2$) as the fuel and $LO_2$ as the oxidizer (ILS-LM 2004). The Centaur uses less than 91 kg (200 lb) of hydrazine for reaction control (USAF 2000).

#### 2.1.5.1.3 Payload Fairing

The PLF for the Atlas V is about 5.4 m (18 ft) in diameter and about 20.7 m (68 ft) in length and is constructed of aluminum, carbon fiber, and composite materials. The PLF encloses and protects the spacecraft from thermal, acoustic, electromagnetic, and environmental conditions during ground operations and lift-off through atmospheric ascent (ILS-LM 2004). Figure 2-12 depicts the MSL spacecraft within the PLF envelope.

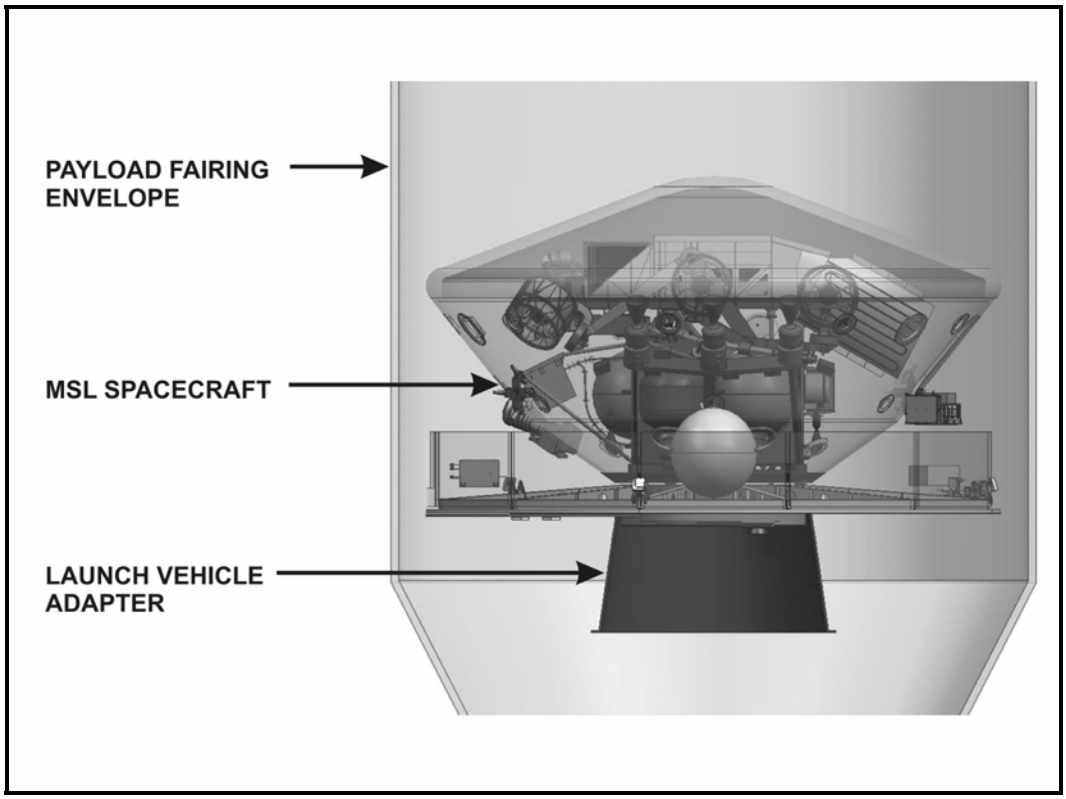


**FIGURE 2-12. ILLUSTRATION OF THE MSL SPACECRAFT WITHIN THE PAYLOAD FAIRING ENVELOPE**

#### 2.1.5.1.4 Atlas V Space Launch Complex-41

Space Launch Complex (SLC)-41 is located in the southernmost section of KSC. NASA has permitted CCAFS to use SLC-41 and the surrounding land. The launch complex consists of a launch pad, an umbilical mast, propellant and water storage areas, an exhaust flume, catch basins, security services, fences, support buildings, and facilities necessary to prepare, service, and launch Atlas V vehicles (USAF 1998, ILS-LM 2004).

Security at SLC-41 is ensured by a perimeter fence, guards, and restricted access. Since all operations in the launch complex would involve or would be conducted in the vicinity of liquid or solid propellants and explosive devices, the number of personnel permitted in the area, safety clothing to be worn, the type of activity permitted, and equipment allowed would be strictly regulated. The airspace over the launch complex would be restricted at the time of launch.

#### 2.1.5.1.5 Launch Vehicle Processing

Atlas launch vehicle preparation activities and procedures during and after launch have been previously documented (USAF 1998, ILS-LM 2004). All NASA launches follow the current standard operating procedures.

The Atlas V launch vehicle components for the MSL mission would be received at CCAFS, where they would be inspected, stored, and processed at appropriate facilities. When needed for launch, the components would be moved to the Vertical Integration Facility (VIF) at SLC-41, where the launch vehicle would be assembled, integrated, and tested. The PLF, containing the MSL spacecraft, would then be transported from the PHSF at KSC to the VIF and mated to the Centaur second stage. The Atlas V launch vehicle would then be moved via rail on a mobile launch platform, limited to a speed of 3.2 km/h (2 mph), to the launch pad at SLC-41 for a rehearsal of loading the RP-1, $LO_2$ and $LH_2$ liquid propellants, and then unloading the $LO_2$ and $LH_2$. The vehicle (with RP-1) would then be moved back to the VIF, where hydrazine would be loaded and final vehicle processing would be performed. The MMRTG would then be installed on the spacecraft. The launch vehicle would then be moved back to the pad for $LO_2$ and $LH_2$ loading, final system tests, and launch (USAF 1998, USAF 2000, ILS-LM 2004).

Processing activities for the MSL Atlas V vehicle would be similar to those routinely practiced for other Atlas launches from CCAFS. Effluents and solid or hazardous wastes that may be generated by these activities are subject to Federal and State laws and regulations. NASA or its contractors would dispose of hazardous wastes. CCAFS has the necessary environmental permits and procedures for conducting launch vehicle processing activities (see Section 4.9).

#### 2.1.5.1.6 Launch Profile

Launch of the Atlas V would begin with the ignition of the first stage main engine followed approximately 3 seconds[4] later by ignition of the four SRBs (Figure 2-13). The SRB casings would be jettisoned after propellant burnout. The first stage main engine would continue to thrust and the PLF would be jettisoned. The main engine cutoff sequence would be initiated when low propellant levels are detected by the first stage propellant sensors (ILS-LM 2004). The first stage would then separate from the second stage. The SRB casings, the PLF, and the first stage would fall into the Atlantic Ocean in predetermined drop zones and would not be recovered (USAF 2000).

The Centaur second stage would be ignited shortly after separation from the first stage. Upon achieving Earth parking orbit, the Centaur engine thrust would be cut off via a timed command. After a brief, predetermined coast period in an Earth parking orbit, the Centaur engine would restart and the vehicle would accelerate to Earth escape velocity. After Centaur engine cutoff, the MSL spacecraft would separate from the Centaur and continue on its trajectory to Mars. The Centaur would continue separately into interplanetary space.

[4] The engine undergoes an automatic "health check" during this period. Should a malfunction be detected, the engine would be shutdown and the launch would be aborted.

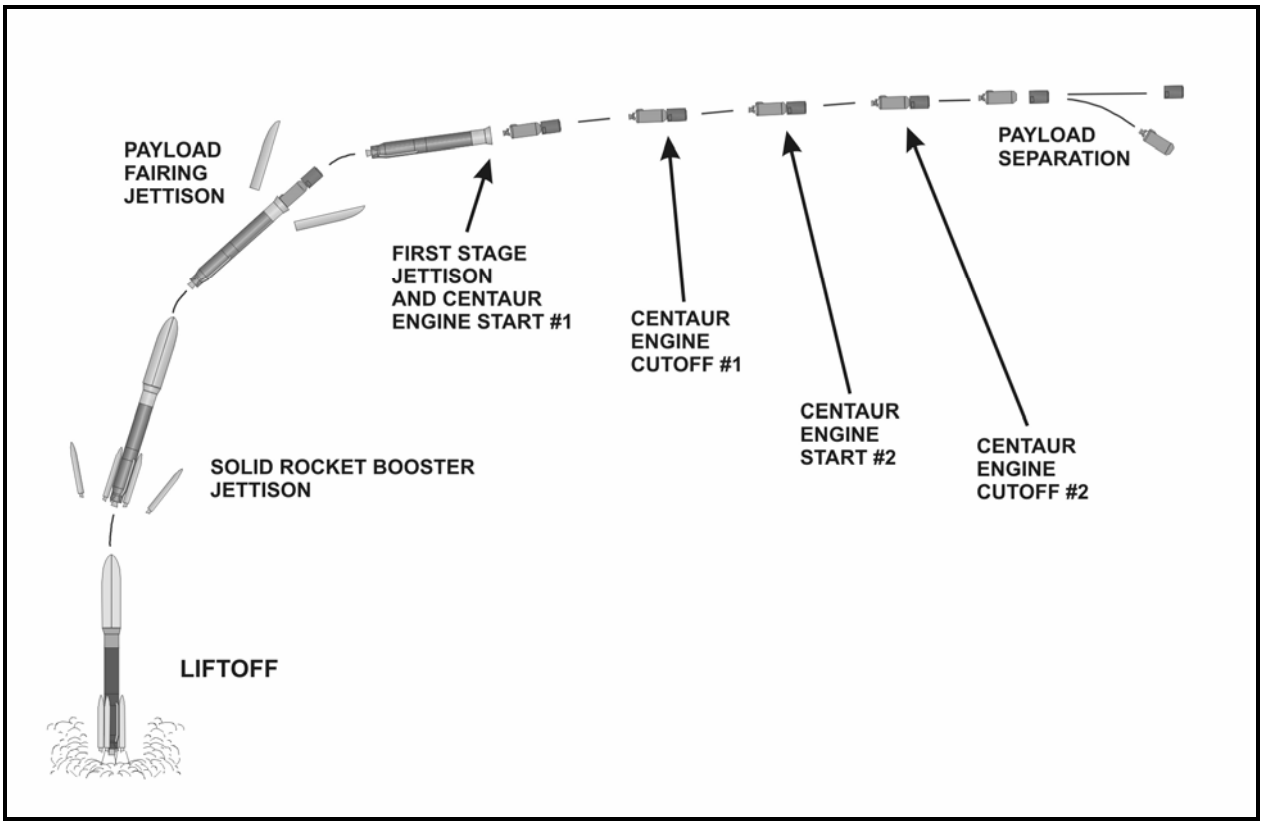


Source: Adapted from ILS-LM 2004

**FIGURE 2-13. TYPICAL ATLAS V ASCENT PROFILE**

### 2.1.5.2 Description of the Delta IV Heavy Launch Vehicle

The Delta launch vehicle program was initiated in the late 1950s by NASA with Douglas Aircraft (which then became McDonnell Douglas, and is now part of The Boeing Company, a NLS approved contractor). Boeing developed an interim space launch vehicle using a modified Thor missile as the first stage and Vanguard components as the second and third stages. The Delta IV launch system, evolved from the Delta II and Delta III launch systems, is the latest generation in this nearly 50-year evolution. The Delta IV is currently available in Medium, Medium+, and Heavy configurations.

The representative Delta IV configuration for the proposed MSL mission is the Delta IV Heavy, which would consist of a liquid propellant first stage (called the common booster core (CBC)), two strap-on CBCs, a liquid propellant second stage, the MSL spacecraft, and a 5-m PLF. The additional CBCs are attached to the first stage, and the second stage is mounted atop the first stage. The MSL spacecraft would be mounted atop the second stage. The PLF encloses and protects the spacecraft. The Delta IV Heavy, depicted in Figure 2-14, is approximately 71.6 m (235 ft) in height (Boeing 2002).

#### 2.1.5.2.1 First Stage

The Delta IV Heavy first stage CBCs are constructed mostly of aluminum and composite material. Each CBC is about 5 m (16.4 ft) in diameter and about 39.6 m (130 ft) in length. The CBCs are each powered by a cryogenic engine and each contains about 202,105 kg (445,560 lb) of propellant consisting of $LH_2$ as the fuel and $LO_2$ as the oxidizer for a total first stage propellant load of 606,300 kg (1,336,650 lb). A cylindrical Interstage that encloses the second stage is mounted on the central CBC. Aerodynamic nosecones are mounted on the two strap-on CBCs in place of the Interstage (Boeing 2002, Freeman 2006).

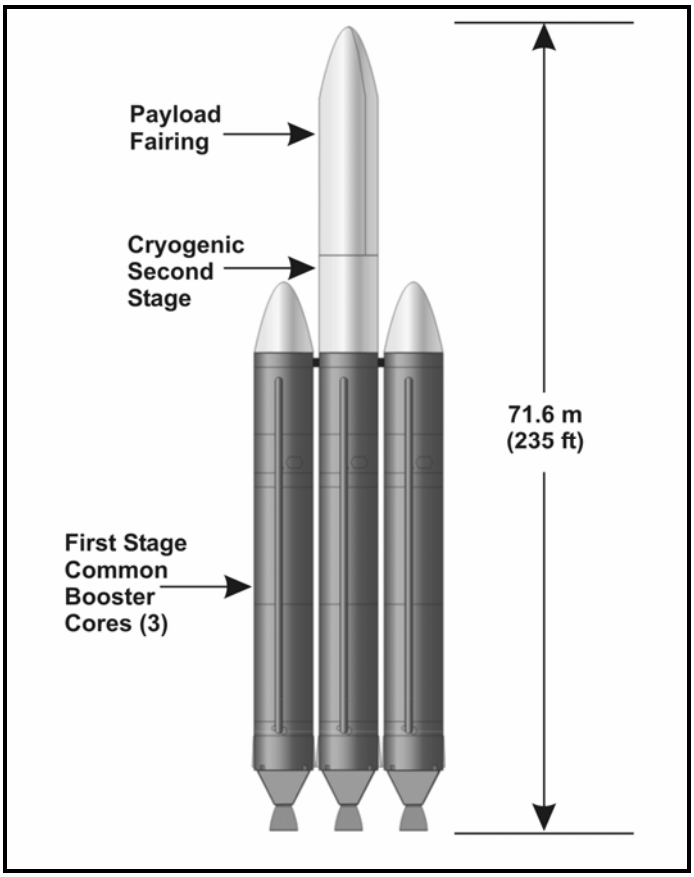


Source: Adapted from Boeing 2002

**FIGURE 2-14. ILLUSTRATION OF A DELTA IV HEAVY LAUNCH VEHICLE**

#### 2.1.5.2.2 Second Stage

The Delta IV second stage is constructed of aluminum and composite material is about 5 m (16.4 ft) in diameter and about 13 m (42.7 ft) in length. The stage is powered by a single cryogenic engine, and contains about 27,200 kg (60,000 lb) of propellant, consisting of $LH_2$ as the fuel and $LO_2$ as the oxidizer. The stage also uses about 154 kg (340 lb) of hydrazine for reaction control (Boeing 2002, Freeman 2006).

#### 2.1.5.2.3 Payload Fairing

The PLF for the Delta IV is about 5.1 m (16.8 ft) in diameter and about 19.1 m (62.7 ft) in length and is constructed of composite materials. The PLF encloses and protects the spacecraft from thermal, acoustic, electromagnetic, and environmental conditions during ground operations and lift-off through atmospheric ascent (Boeing 2002). Figure 2-12 depicts the MSL spacecraft within the PLF envelope.

#### 2.1.5.2.4 Delta IV Space Launch Complex-37

SLC-37 is located in the northeastern section of CCAFS. The launch complex consists of a launch pad, a mobile service tower (MST), a fixed umbilical tower, propellant and water storage areas, an exhaust flume, catch basins, security services, fences, support

buildings, and facilities necessary to prepare, service, and launch Delta IV vehicles (USAF 1998, Boeing 2002).

Security at SLC–37 is ensured by a perimeter fence, guards, and restricted access. Since all operations in the launch complex would involve or would be conducted in the vicinity of liquid or solid propellants and explosive devices, the number of personnel permitted in the area, safety clothing to be worn, the type of activity permitted, and equipment allowed would be strictly regulated. The airspace over the launch complex would be restricted at the time of launch.

#### 2.1.5.2.5 Launch Vehicle Processing

Delta launch vehicle preparation activities and procedures during and after launch have been previously documented (USAF 1998, Boeing 2002). All NASA launches follow the current standard operating procedures.

The Delta IV launch vehicle components for the MSL mission would be received at CCAFS, where they would be inspected, stored, and processed at appropriate facilities. When needed for launch, the components would be moved to the Horizontal Integration Facility (HIF) at SLC-37, where the launch vehicle would be assembled, integrated, and tested. The Delta IV launch vehicle would then be moved via rail on the MST to the launch pad at SLC-37. The PLF, containing the MSL spacecraft, would then be transported from the PHSF at KSC directly to the launch pad at SLC-37 and mated to the second stage. The MMRTG would then be installed on the spacecraft. The vehicle would then be loaded with hydrazine and the $LO_2$ and $LH_2$ liquid propellants and undergo final preparations for launch (Boeing 2002).

Processing activities for the MSL Delta IV vehicle would be similar to those routinely practiced for other Delta launches from CCAFS. Effluents and solid or hazardous wastes that may be generated by these activities are subject to Federal and State laws and regulations. NASA or its contractors would dispose of hazardous wastes. CCAFS has the necessary environmental permits and procedures for conducting launch vehicle processing activities (see Section 4.9).

#### 2.1.5.2.6 Launch Profile

Launch of the Delta IV Heavy would begin with simultaneous ignition of the main engines[5] in the three first-stage CBCs (Figure 2-15). The two strap-on CBCs would thrust at a higher level than the central CBC, and their propellant would be depleted sooner. After engine cutoff, the strap-on CBCs would be jettisoned. The central CBC engine would continue to thrust until main engine cutoff, after which the first stage would separate from the second stage. The three depleted CBCs would fall into the Atlantic Ocean in predetermined drop zones and would not be recovered (USAF 2000).

[5] The engines undergo an automatic "health check" 5 seconds before liftoff. Should a malfunction be detected, the engines would be shutdown and the launch would be aborted.

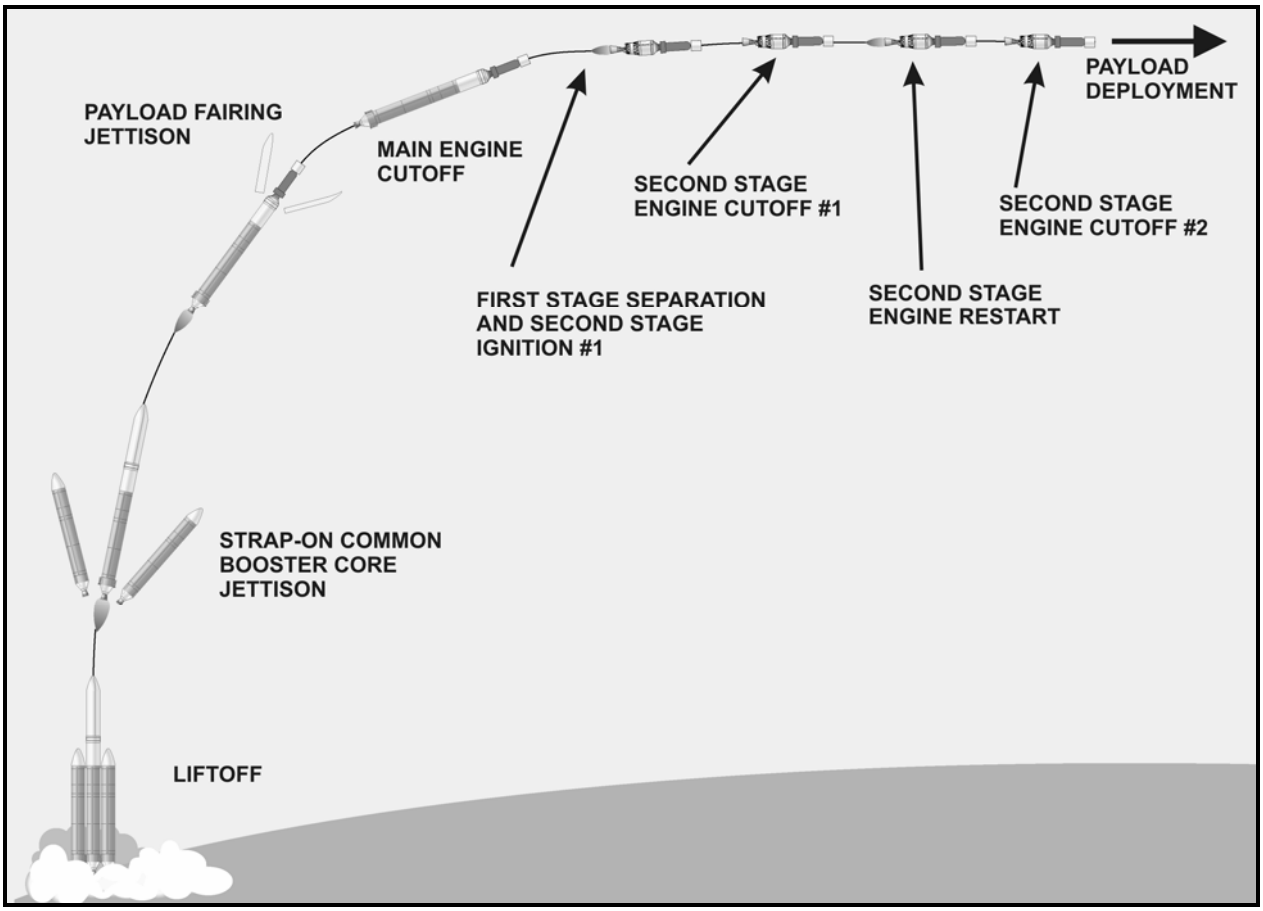


Source: Adapted from Boeing 2002

**FIGURE 2-15. TYPICAL DELTA IV HEAVY ASCENT PROFILE**

The second stage would be ignited shortly after separation from the first stage. The PLF would then be jettisoned and would also fall into the Atlantic Ocean in predetermined drop zones and would not be recovered. Upon achieving Earth parking orbit, the second stage engine thrust would be cut off via a timed command. After a brief, predetermined coast period in an Earth parking orbit, the second stage engine would restart and the vehicle would accelerate to Earth escape velocity. After second stage engine cutoff, the MSL spacecraft would separate from the second stage and continue on its trajectory to Mars. The second stage would continue separately into interplanetary space.

#### 2.1.5.3 Flight Termination System

Range Safety requires launch vehicles to be equipped with safety systems, collectively called the Flight Termination System (FTS), which are capable of causing destruction of the launch vehicle in the event of a major vehicle malfunction. Range Safety further specifies in the *Range Safety User Requirements Manual* (USAF 2004) that for any launch vehicle the FTS reliability goal shall be a minimum of 0.999 at the 95 percent confidence level. The FTS for the MSL mission would provide the capability to destroy

the launch vehicle, if necessary, either (1) autonomously after detecting an inadvertent breakup of the vehicle or unintentional separation of vehicle stages, or (2) by commands issued via secure radio links. The primary elements of the FTS, common for either the Atlas V or the Delta IV, would consist of an Automatic Destruct System (ADS) and a Command Destruct System (CDS). The FTS for the Atlas V would also include a Centaur Automatic Destruct System (CADS).

If inadvertent vehicle breakup or premature stage separation occurs, the ADS would automatically initiate ordnance components that split open all first and second stage propellant tanks to disperse the liquid propellants and split any strap-on solid rocket casings to terminate solid motor thrusting. Upon receipt of valid commands from Range Safety, the CDS would shut down the first stage or second stage main engines (depending on the timing of the event), and initiate destruction of the vehicle in the same manner as the ADS.

The FTS for the Atlas V would be armed 97 seconds before liftoff; the FTS for the Delta IV would be armed 4 minutes before liftoff. Each major component of the FTS would be safed (automatically deactivated) at various times during the vehicle's ascent when the component would no longer be needed and to preclude its inadvertent activation. The ADS would be safed prior to separation of the first and second stages and the CDS would be safed immediately after the second stage with the MSL spacecraft has achieved Earth parking orbit.

For the Atlas V 541, an Inadvertent Separation Destruct System (ISDS) would be incorporated on each of the four SRBs. In the event of an inadvertent or premature separation of an SRB, the ISDS would initiate a linear shaped charge to disable the SRB after a brief time delay to assure clearance from the Atlas V. The ISDS would be deactivated during a normal SRB separation event.

#### 2.1.5.4 Range Safety Considerations

CCAFS has implemented range safety requirements (USAF 2004). For the MSL mission, predetermined flight safety limits would be established for each day of the launch period. Wind criteria, impacts from fragments that could be produced in a launch accident, dispersion and reaction (*e.g.*, toxic plumes, fire) of liquid and solid propellants, human reaction time, data delay time, and other pertinent data would be considered when determining flight safety limits. The Mission Flight Control Officer would take any necessary actions, including destruction of the vehicle via the CDS, if the vehicle's trajectory indicates flight malfunctions (*e.g.*, exceeding flight safety limits) (USAF 2004).

Range Safety at CCAFS uses models to predict launch hazards to the public and to launch site personnel prior to a launch. These models calculate the risk of injury resulting from toxic exhaust gases from normal launches, and from potentially toxic concentrations due to a failed launch. The launch would be postponed if the predicted collective risk of injury from exposure to toxic gases exceeds established limits (USAF 2004). Range Safety monitors launch surveillance areas to ensure that risks to people, aircraft, and surface vessels are within acceptable limits. Controlled surveillance areas and airspace are closed to the public as required (USAF 1998).

#### 2.1.5.5 Electromagnetic Environment

Launch vehicles may be subject to electromagnetic conditions such as lightning, powerful electromagnetic transmissions (*e.g.*, radar, radio transmitters), and charging effects (*i.e.*, electrical charges generated by friction and the resultant electrostatic discharges). NASA and the USAF address such conditions with respect to the design of the launch vehicle, as well as with ordnance (*e.g.*, explosives, explosive detonators and fuses), fuels, exposed surfaces of the vehicle, and critical electronic systems that must have highly reliable operations. A large body of technical literature exists on these subjects and has been used by NASA and the USAF in designing safeguards (see, for example, USAF 2004). The launch vehicle, the MSL spacecraft, and the launch support systems would be designed and tested to withstand these environments in accordance with requirements specified in USAF 2004.

### 2.1.6 Radiological Emergency Response Planning

Prior to launch of the MSL mission, a comprehensive set of plans would be developed by NASA to ensure that any launch accident could be met with a well-developed and tested response. NASA's plans would be developed in accordance with the National Response Plan (NRP) (DHS 2004) and the NRP Nuclear/Radiological Incident Annex with the combined efforts of the U.S. Department of Homeland Security (DHS), DHS's Federal Emergency Management Agency, DOE, the U.S. Department of Defense (DOD), the U.S. Department of State (DOS), the U.S. Environmental Protection Agency (EPA), the State of Florida, Brevard County, and local organizations. These organizations and other Federal agencies, as appropriate, could be involved in response to a radiological emergency.

The radiological emergency response plan would be exercised prior to launch to verify that the response interfaces, command channels, and field response-organizations would be prepared to respond in the unlikely event of a launch accident. NASA would be the Coordinating Agency, and in the event of a declaration of an Incident of National Significance, would work with the DHS to coordinate the entire Federal response for launch accidents occurring within United States jurisdiction. Should a release of radioactive material occur in the launch area, the State of Florida, Brevard County, and local governments would determine an appropriate course of action for any regional areas (such as sheltering in place, evacuation, exclusion of people from contaminated land areas, or no action required) and would have full access to the coordinated Federal response. For accidents outside United States' jurisdiction defined as Incidents of National Significance, NASA and DHS would assist the DOS in coordinating the United States' response via diplomatic channels and in deploying Federal resources as requested.

To manage the radiological contingency response, NASA would establish a radiological emergency response capability that would include a radiological assessment and command center as well as field monitoring assets deployed prior to launch. The assessment and command center would be the focal point for NASA and DHS coordination efforts. This center would also be used to coordinate the initial Federal response to a radiological contingency until the MSL spacecraft has left Earth orbit.

Pre-deployed assets to support a response to a potential launch accident would include representation from NASA, DHS, DOE, DOD, DOS, EPA, USAF, the National Oceanic and Atmospheric Administration, the State of Florida, and Brevard County. An additional control center outside the KSC/CCAFS boundaries would be established with monitoring assets deployed prior to launch for radiological monitoring and assessment activities required in local areas.

If impact occurs in the ocean following an accident, NASA would coordinate with the DHS, the U.S. Coast Guard, the U.S. Navy, and DOE to initiate security measures and assess the feasibility of search and retrieval operations. Efforts to recover the MMRTG or its components would be based on technical feasibility and in consideration of any potential health hazards presented to recovery personnel, and potential environmental impacts.

## 2.2 DESCRIPTION OF ALTERNATIVE 2

The mission and spacecraft for Alternative 2 would be designed and developed, to the extent feasible, to meet the operational capabilities summarized in Table 2-1. The descriptions presented in this section for Alternative 2 are based on the information available at the time this DEIS was prepared, as presented in the *MSL Solar Feasibility Study* (JPL 2006). Alternative 2, as described, does not make use of radioisotope heater units (RHU) for additional heat. Should NASA make changes in Alternative 2 that are relevant to environmental concerns, NASA would evaluate the need for additional environmental documentation (see Section 2.4.2).

### 2.2.1 Mission and Spacecraft Description

Many of the technical aspects of the mission and spacecraft designs for Alternative 2 would be similar to those described in Section 2.1 above for the Proposed Action (Alternative 1). These would include the following major features.

- The MSL spacecraft would be launched from CCAFS on board an expendable launch vehicle from either the Atlas V or Delta IV class of vehicles (see Section 2.1.5 for representative descriptions of these vehicles).
- The mission design would be as described in Section 2.1.1, including a first 20-day launch period opening September 15, 2009 and a second 20-day launch period opening October 19, 2009, with an Earth-Mars trajectory leading to direct entry of the spacecraft into the Martian atmosphere.
- The MSL flight system would consist of a cruise stage, entry vehicle, and descent stage as described in Section 2.1.2, and a science rover.
- The rover's science instrument payload would be as described in Table 2-2. Planning for the rover science mission would be based upon an operational timeline similar to that described in Section 2.1.1.

The MSL rover for Alternative 2 would use a solar array as the source of electrical power for its engineering subsystems and science payload (JPL 2006). The size of the array would be limited by the volume constraints of the entry vehicle, which in turn is

limited in size by the diameter of the launch vehicle payload fairing (see Figure 2-12). The solar array would attach to the back section of the rover and would be folded for stowage inside the entry vehicle. The array would be deployed after the rover has landed on the surface of Mars. Representative stowed and deployed array configurations are illustrated in Figure 2-16.

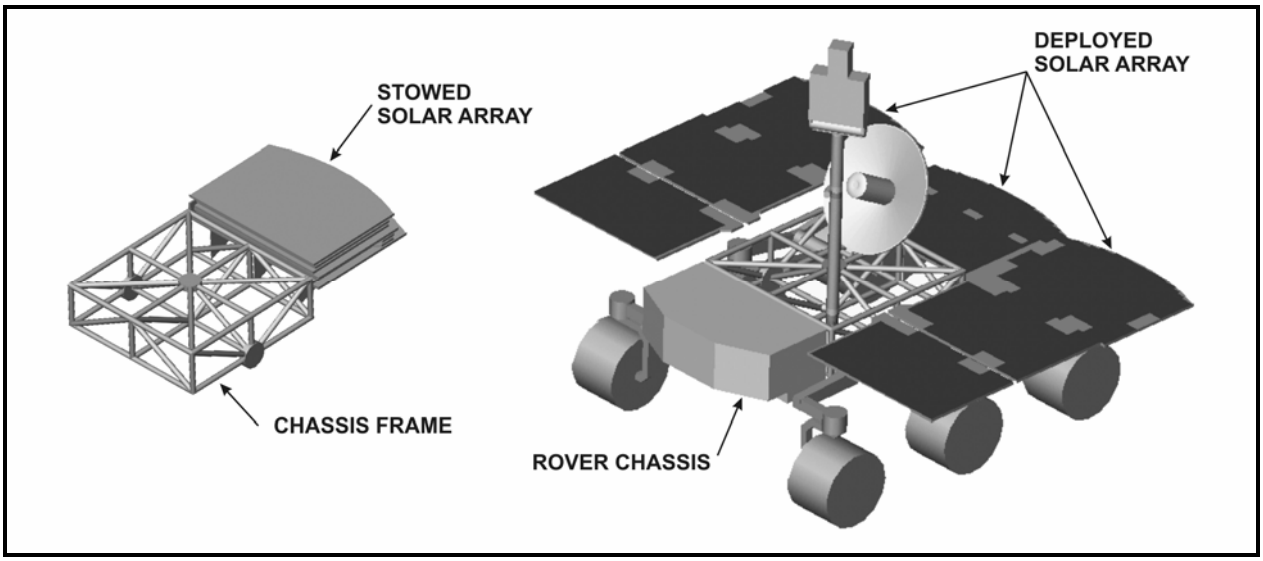


Source: Adapted from JPL 2006

**FIGURE 2-16. ILLUSTRATION OF A REPRESENTATIVE SOLAR-POWERED ALTERNATIVE 2 MSL ROVER**

After landing, the solar array would be deployed into seven separate panels surrounding the rover on three sides and would be in a fixed position parallel with the upper surface of the rover chassis. The deployed array would have a surface area of approximately 6 square meters (64.6 square feet). The array would consist of the same type of multi-junction solar cells as are used on the Mars Exploration Rovers (MER), which landed on Mars in January 2004. At the atmospheric temperatures of the MER landing sites near the equator of Mars, this array would have a conversion efficiency of about 26 percent.

### 2.2.2 Solar Power Availability

The available electrical power produced by the solar array described in Section 2.2.1 would be a function of several factors (JPL 2006). The most important of these are the landing site latitude and time of year on Mars, which affect the incidence angle of the sunlight shining on the array and the amount of time sunlight is available per sol. Low incidence angles at high latitudes and short periods of daylight during Martian Winter would reduce the available amount of electrical power produced by the solar array. Other factors affecting array output would include shadowing of the array from the masts and antennas, the amount of dust in the Martian atmosphere, and dust deposition on the array. Sufficient battery capacity is assumed to be available on the rover to completely store the energy collected by the solar array.

All of the energy that this solar array would generate per sol could not be used exclusively to perform science operations. The rover would need to maintain its thermal health and mechanical functionality so that it could communicate with Earth and drive to specified science locations. The solar energy required to maintain the rover's thermal health would vary with latitude and time of year. During the Martian Winter there would be a higher demand for heat to maintain the rover's components within acceptable thermal limits, but there would be less total energy available from the solar array for the reasons discussed above.

Of the available energy per sol, approximately 250 watt-hours would be needed to perform science operations, which would include driving to science locations and acquiring and analyzing samples and other scientific data. The remainder of the available energy would be needed for the rover's engineering functions, including communications and thermal control. Figure 2-17 illustrates locations on the surface of Mars where there would be sufficient solar power for the rover to perform science operations and maintain its health and functionality as a function of latitude over the course of one Mars year. Sufficient solar power for one Mars year is only available at approximately 15° North latitude.

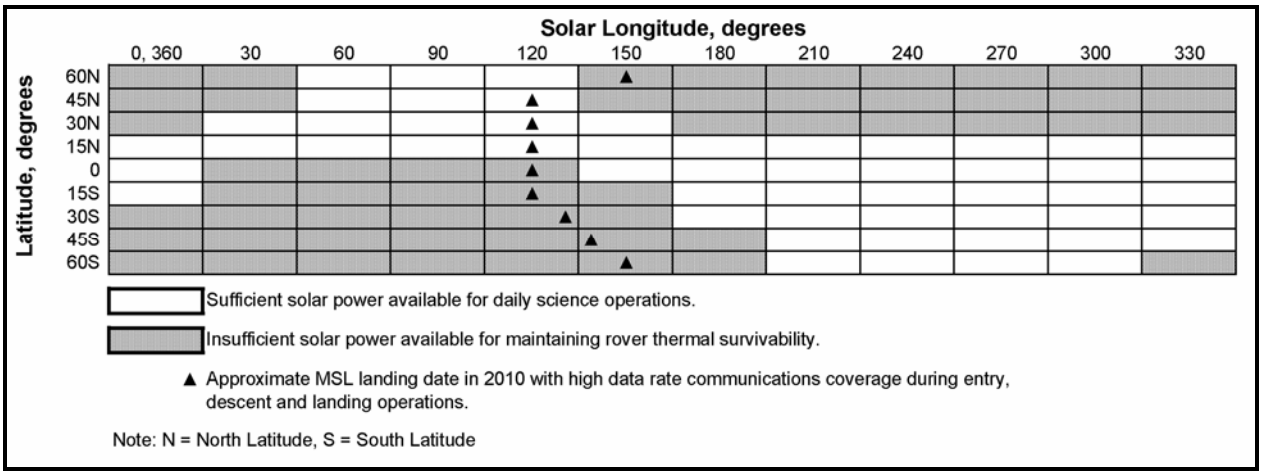


Source: Adapted from JPL 2006

**FIGURE 2-17. ESTIMATED SOLAR POWER AVAILABILITY ON THE SURFACE OF MARS**

The solar feasibility assessment (JPL 2006) was performed with sufficient detail to develop estimates for a representative solar-powered rover configuration, but is not a detailed engineering design. Should NASA select Alternative 2, the solar-powered rover design would then be completed, which could result in small increases in mission duration at a particular landing site but would likely not change the fundamental results presented in the solar feasibility assessment.

### 2.2.3 Operational Considerations

For the reasons discussed below, the solar-powered rover for Alternative 2 would not be capable of operating over the full range of scientifically desirable landing site latitudes (see Table 2-1).

The MSL spacecraft would need to arrive at Mars at a time when either the MRO or the Mars Odyssey spacecraft is in position to enable high data rate communications during the entry, descent and landing phase of the mission, limiting solar longitude at arrival to between approximately $L_S$ = 120° and $L_S$ = 150°. As shown in Figure 2-17, this arrival date constraint would limit the latitudes in which the solar-powered rover could safely and successfully operate for a reasonable period of time. The rover would be able to operate for a full Mars year only within a narrow latitude band with maximal performance at 15° North. At higher Northern latitudes the rover would only be able to operate for a short period of time before available solar power would drop below operational levels and the rover would likely succumb to extreme cold temperatures. At latitudes at and below the Martian equator, the rover would land at times when available solar power is already below the levels necessary for survivability.

Figure 2-18 shows the estimated amount of time the solar-powered MSL rover would be able to perform science operations as a function of landing site latitude for the constrained range of arrival dates. Only at 15° North latitude could the rover operate

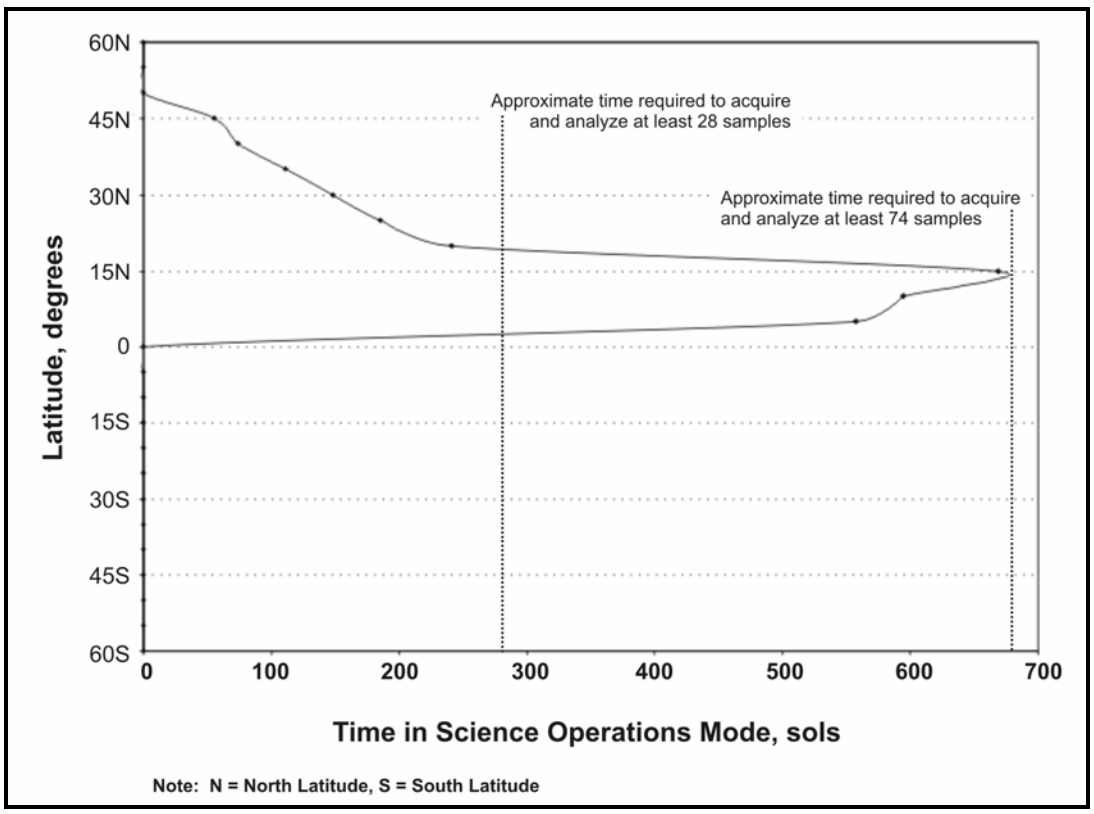


Source: Adapted from JPL 2006

**FIGURE 2-18. ESTIMATED ROVER SCIENCE CAPABILITY WITH SOLAR POWER**

throughout one Mars year (670 sols) and acquire and analyze at least 74 diverse rock and soil samples. Estimating from Figure 2-18, in a latitude band from approximately 5° North to 20° North the rover could operate reliably for at least 50 percent of one Mars year (335 sols) and acquire and analyze at least 28 diverse rock and soil samples in order to achieve the minimum functional and science capabilities (see Table 2-1).

## 2.3 DESCRIPTION OF THE NO ACTION ALTERNATIVE

Under the No Action Alternative, NASA would discontinue preparations for the 2009 MSL mission. The next step in NASA's Mars Exploration Program following the planned Phoenix Lander mission in 2007 would not be conducted as currently envisioned, and NASA would need to reevaluate its programmatic options for the 2009 launch opportunity to Mars and beyond.

Without development and implementation of a large mobile science platform such as the rover planned for the MSL mission, NASA's ability to acquire detailed scientific information on the habitability of Mars would be severely limited, and the advancements in technological and operational capabilities necessary for the future exploration of Mars may not be achieved.

## 2.4 ALTERNATIVES CONSIDERED BUT NOT EVALUATED FURTHER

This section presents alternatives to the Proposed Action that were considered but were eliminated from further evaluation for the reasons discussed below.

### 2.4.1 Alternative Power Sources

An electrical power generating system consists of an energy source and an energy conversion system. The available energy sources for a space mission include the Sun, chemicals in fuel cells or batteries, heat from radioactive decay, or the combustion of fuels. An energy conversion system transforms energy into electricity using, for example, photovoltaic cells, thermoelectric couples, or dynamic conversion machinery.

Alternative power sources to the MMRTG were evaluated that could potentially reduce or eliminate the environmental risks associated with the $PuO_2$ used in the MMRTG. The other power systems considered include those that either replace the $PuO_2$ in the MMRTG with a potentially less hazardous radioisotope, or implement power system designs that require less $PuO_2$.

#### 2.4.1.1 Other Radioisotope RTGs

The principal concern with using $PuO_2$ in RTGs is the potential radiation health and environmental hazards created if the $PuO_2$ is released into the environment following an accident. In principle, any radioisotope with a half-life long enough to provide sufficient power throughout the proposed MSL rover's surface mission and with a high enough specific activity to provide the required power with a suitably small generator can be used. For example, two other radioisotopes possible for RTGs are the oxides of strontium-90 (Sr-90) and curium-244 (Cm-244). Sr-90 emits gamma radiation and Cm-244 emits both gamma and neutron radiation. $PuO_2$ emits much less gamma and

neutron radiation than Sr-90 and Cm-244. Because gamma and neutron radiation are more penetrating than the alpha particles emitted by Pu-238, extensive shielding (not required with $PuO_2$) would be required during production and handling, as well as on the spacecraft to protect sensitive components. Therefore, Sr-90 and Cm-244 oxides are not considered feasible isotopic heat sources for space missions (NASA 1995).

#### 2.4.1.2 Power Systems Requiring Less Plutonium Dioxide

NASA, in cooperation with DOE, is currently developing a Stirling Radioisotope Generator (SRG) for application to a variety of deep space missions. The SRG would use a Stirling engine to convert heat into mechanical energy, which in turn would be converted into electricity. The SRG could be four times more efficient than the MMRTG, and therefore could require one-fourth as much $PuO_2$ for the same power output. However, the Stirling conversion technology has not yet been demonstrated in space for production of electricity from heat since its development is not complete, and the first potential application of the SRG would not occur before 2010 or later (NASA 2005c), beyond the timeframe of the Proposed Action (Alternative 1).

### 2.4.2 Additional Heat Sources

An alternative rover design was considered for which a solar-powered MSL rover would utilize 30 RHUs to provide additional heat (JPL 2006). A RHU is a passive device that provides about one (1) watt of heat derived from the radioactive decay of about 2.7 grams (0.1 ounces) of $PuO_2$ with an activity of approximately 33.2 Ci. A RHU is 2.6 cm (1.03 in) in diameter, 3.2 cm (1.26 in) in length, and has a mass of about 40 grams (1.4 ounces). The additional heat would help maintain the solar-powered rover's health and functionality during extreme cold temperature conditions.

This alternative showed only small improvement in operational capability when compared to the capability of a solar-powered rover without RHUs (JPL 2006). Furthermore, this small improvement in operational capability would only occur during MSL mission arrival dates for which high data rate communication would not be available during entry, descent, and landing operations. For these reasons this alternative was not evaluated further.

The use of up to 30 RHUs for this alternative would result in mission risks and related radiological consequences, as estimated by DOE (DOE 2006b), of nominally 2 percent of the estimated risks and consequences associated with the Proposed Action (Alternative 1), summarized in Section 2.5.1.3 below. If Alternative 2, which includes a solar-powered rover design, is selected for the MSL mission, NASA may reconsider the use of RHUs to provide additional heat. In that event, NASA would consider the need for additional environmental documentation.

## 2.5 COMPARISON OF ALTERNATIVES INCLUDING THE PROPOSED ACTION

For the purpose of the evaluations presented in this DEIS, the primary difference between the baseline MSL mission described in the Proposed Action (Alternative 1) and the MSL mission described in Alternative 2 is the source of electrical power that would be used for the MSL rover. For the Proposed Action the rover power source would be

an MMRTG, described in Section 2.1.3, whereas for Alternative 2 the rover power source would be a solar array, described in Section 2.2.1.

### 2.5.1 Comparison of Mission Science Capabilities

The MSL rover designs in both the Proposed Action (Alternative 1) and Alternative 2 would carry the same science instruments and hence either alternative could conduct the same set of experiments. The estimated science capability for these two alternatives, expressed in terms of the number of samples acquired and analyzed at a given latitude on Mars, is summarized in Table 2-5.

**TABLE 2-5. ESTIMATED SCIENCE CAPABILITY COMPARISON OF THE MSL MISSION ALTERNATIVES**

| Rover Power Alternative | Landing Site Latitude Range [(a)] | Science Operations Time, Percent of One Martian Year at Landing Site Latitude | Number of Samples at Landing Site Latitude |
|---|---|---|---|
| MMRTG | 60°S to 60°N | 100% | At Least 74 |
| Solar Array | 60°S to 0° | Unable to Operate | None |
| | 0° to 5°N | Less Than 50% | Less Than 28 |
| | 5°N to 20°N | 50% to 100% at 15°N | 28 to At Least 74 at 15°N |
| | 20°N to 50°N | less than 50% | Less Than 28 |
| | 50°N to 60°N | Unable to Operate | None |

(a) For arrival dates during which high data rate communciations during entry, descent and landing operations is supported by an orbiting spacecraft.

Notes: All values are approximate. N = North Latitude; S = South Latitude.

Alternative 1. The MMRTG-powered rover would be capable of achieving all of the target operational capabilities summarized in Table 2-1, including landing at a scientifically interesting location between 60° South and 60° North latitude, and operating and conducting science for at least one Mars year.

Alternative 2. At most latitudes on Mars the amount of time that a solar-powered rover could perform science operations would be limited by the ability of the solar array to generate sufficient power for the rover to survive the extreme thermal environment. At latitudes on Mars between 60° South and 5° North and between 20° North and 60° North a solar-powered rover either would not have sufficient power to operate at all, or would not be able to survive long enough to accomplish even the minimum science. A solar-powered rover could operate for at least one-half Mars year and achieve the minimum science capability only at latitudes ranging from slightly above 5° North to slightly below 20° North, and could operate for a full Mars year and accomplish the full science objectives only at 15° North latitude.

No Action Alternative. The No Action Alternate would not accomplish any science on the surface of Mars, which does not fulfill the purpose and need for the MSL mission as discussed in Chapter 1 of this EIS.

### 2.5.2 Comparison of Potential Environmental Impacts

This section summarizes and compares the potential environmental impacts of the Proposed Action (Alternative 1), Alternative 2, and the No Action Alternative. The anticipated impacts associated with nominal or normal implementation of Alternatives 1 and 2 are considered first. This is followed by a summary of the nonradiological impacts that could occur due to a potential launch accident with either Alternatives 1 and 2, and finally a summary of potential radiological consequences and risks from a launch accident associated with the Proposed Action (Alternative 1). No radiological impacts resulting from the use of a MMRTG would be associated with Alternative 2 without RHUs and there would be no radiological impacts associated with the No Action Alternative. Details of the results summarized in this section can be found in Chapter 4.

As noted in Section 2.1.5, the evaluations presented in this DEIS, based on representative configurations of Atlas V and Delta IV launch vehicles, were completed prior to NASA's selection of the proposed Atlas V configuration, the Atlas V 541. NASA considers these evaluations to adequately bound the potential environmental consequences of the alternatives described in this DEIS. NASA will continue its analysis of the alternatives and may update the evaluations with information specific to the Atlas V 541 launch vehicle in the Final EIS.

#### 2.5.2.1 Environmental Impacts of a Normal Launch

Table 2-6 provides a summary comparison of the anticipated environmental impacts associated with normal implementation of Alternatives 1 and 2 and the No Action Alternative.

Alternatives 1 and 2. The environmental impacts associated with implementing either the Proposed Action (Alternative 1) or Alternative 2 would center largely on the exhaust products emitted from the launch vehicle's strap-on solid rockets and the short-term impacts of those emissions, should a vehicle that uses solid rockets be selected. High concentrations of solid rocket motor exhaust products, principally aluminum oxide ($Al_2O_3$) particulates, carbon monoxide (CO), hydrogen chloride (HCl), nitrogen ($N_2$), and water ($H_2O$), would occur in the exhaust cloud that would form at the launch complex. CO would be quickly oxidized to carbon dioxide ($CO_2$) and $N_2$ may react with oxygen to form nitrogen oxides ($NO_X$). Due to the relatively high gas temperatures, this exhaust cloud would be buoyant and would rise quickly and begin to disperse near the launch pad. High concentrations of HCl would not be expected, so prolonged acidification of nearby water bodies and long-term or cumulative damage to vegetation should not occur. First stage liquid propellant engines that use RP-1 and $LO_2$, such as the Atlas V, would primarily produce CO, $CO_2$, and water vapor as combustion products. First stage liquid propellant engines that use $LH_2$ and $LO_2$, such as the Delta IV, would produce water vapor. For either launch vehicle, no adverse impacts to local air quality would be expected.

## TABLE 2-6. SUMMARY OF ANTICIPATED ENVIRONMENTAL IMPACTS OF THE MSL MISSION ALTERNATIVES

| Impact Category | Mars Science Laboratory Mission Alternatives | |
|---|---|---|
| | **Normal Implementation of the Proposed Action and Alternative 2** | **No Action Alternative** |
| Land Use | Consistent with designated land uses at KSC and CCAFS; no adverse impacts on non-launch-related land uses at KSC and CCAFS would be expected. | No change in baseline condition. |
| Air Quality | High levels of solid propellant combustion products could occur within the exhaust cloud, if a launch vehicle with solid rockets (*i.e.*, the Atlas V 541) is selected. The exhaust cloud would rise and begin to disperse near the launch complex. No long-term adverse air quality impacts would be expected in the region. | No change in baseline condition. |
| Noise and Sonic Boom | Sound exposure levels during launch are estimated to be within OSHA and EPA guidelines for affected workers and the public. | No change in baseline condition. |
| Geology and Soils | Some deposition of $Al_2O_3$ particulates and HCl near the launch complex, if a launch vehicle with solid rockets is selected. No long-term adverse impacts would be expected. | No change in baseline condition. |
| Hydrology and Water Quality | Water used for pre-launch fire protection, heat suppression, acoustic damping, and for post-launch wash down is recovered, treated if necessary, and released to grade. No long-term adverse impacts to groundwater or surface water would be expected; short-term increase in the acidity of nearby surface waters would be expected. | No change in baseline condition. |
| Biological Resources | Biota near the launch complex could be damaged or killed during launch. Possible acidification of nearby surface waters from solid propellant exhaust products could cause some mortality of aquatic biota. No long-term adverse effects would be expected. No short-term or long-term impacts would be expected to threatened or endangered species. No long-term impacts would be expected to critical habitat. | No change in baseline condition. |
| Socioeconomics | Negligible impacts to socioeconomic factors such as demography, employment, transportation, and public or emergency services. | No change in baseline condition. |
| Environmental Justice | No disproportionately high and adverse impacts would be expected. | No change in baseline condition. |
| Cultural/Historical/ Archaeological Resources | No impacts would be expected. | No change in baseline condition. |
| Global Environment | Not anticipated to adversely affect global climate change. Temporary localized decrease in ozone with rapid recovery would be anticipated along the launch vehicle's flight path. | No change in baseline condition. |

If rain were to occur shortly after launch, some short-term acidification of nearby water bodies could occur with the accompanying potential for some mortality of aquatic biota. Biota that happened to be in the path of the exhaust could be damaged or killed. Threatened or endangered species would not be jeopardized nor would critical habitats be affected at CCAFS. As the launch vehicle gains altitude, a portion of the solid rocket motor exhaust (specifically HCl, $Al_2O_3$, and $NO_X$) would be deposited in the stratosphere, resulting in a short-term reduction in ozone along the launch vehicle's flight path. Recovery, however, would be rapid and cumulative impacts would not be expected.

Noise and sonic booms would be associated with the launch. However, neither launch site workers nor the public would be adversely affected. Increased noise levels, anticipated to be below Occupational Safety and Health Administration (OSHA) regulations for unprotected workers, would occur for only a short period during the launch vehicle's early ascent, and would diminish rapidly as the vehicle gains altitude and moves downrange. No impacts to cultural, historical or archaeological resources would be expected from the launch, since any such resources are not located in the vicinity of the launch pad. The MSL mission launch would not be expected to disproportionately impact either minority or low-income populations.

No Action Alternative. Under the No Action Alternative, NASA would discontinue preparations for the 2009 MSL mission, and the spacecraft would not be developed and launched. Thus, none of the anticipated impacts associated with a normal launch would occur.

#### 2.5.2.2 Environmental Impacts of Potential Nonradiological Launch Accidents

Alternatives 1 and 2. Nonradiological accidents could occur during preparation for and launch of the MSL spacecraft at CCAFS. The two most significant nonradiological accidents would be a liquid propellant spill and a launch vehicle failure. For accidents assessed for the Proposed Action (Alternative 1), most accidents would not be expected to result in the release of $PuO_2$ from the MMRTG. The impacts of accidents under the Proposed Action (Alternative 1) which could result in the release of $PuO_2$ are described in Section 2.5.2.3 below.

The potential for environmental consequences would be limited primarily to liquid propellant spills of RP-1, $LH_2$, $LO_2$, and hydrazine, depending on the propellants used in the selected launch vehicle, during fueling operations, and a launch failure at or near the launch pad. USAF safety requirements (USAF 2004) specify detailed policies and procedures to be followed to ensure worker and public safety during liquid propellant fueling operations. Propellant spills or releases of RP-1, $LH_2$, and $LO_2$ would be minimized through remotely operated actions that close applicable valves and safe the propellant loading system. Workers performing propellant loading (*e.g.*, RP-1 and hydrazine) would be equipped with protective clothing and breathing apparatus and uninvolved workers would be excluded from the area during propellant loading. Propellant loading would occur only shortly before launch, further minimizing the potential for accidents.

A launch vehicle failure on or near the launch area during the first few seconds of flight could result in the release of the propellants (solid and liquid) onboard the launch vehicle and the spacecraft. A launch vehicle failure would result in the prompt combustion of a portion of the liquid propellants, depending on the degree of mixing and ignition sources associated with the accident, and somewhat slower burning of the solid propellant fragments, should a vehicle that uses solid rockets be selected. The resulting emissions would resemble those from a normal launch, consisting principally of CO, $CO_2$, HCl, $NO_X$, and $Al_2O_3$ from the combusted propellants, depending on the propellants used in the selected launch vehicle. Falling debris would be expected to land on or near the launch pad resulting in potential secondary ground-level explosions and localized fires. After the launch vehicle clears land, debris from an accident would be expected to fall over the Atlantic Ocean. Modeling of accident consequences with meteorological parameters that would result in the greatest concentrations of emissions over land areas indicates that the emissions would not reach levels threatening public health. Some burning solid and liquid propellants could enter surface water bodies and the ocean resulting in short-term, localized degradation of water quality and conditions toxic to aquatic life. Such chemicals entering the ocean would be rapidly dispersed and buffered, resulting in little long-term impact on water quality and resident biota.

No Action Alternative. Under the No Action Alternative a launch would not occur, therefore there would be no potential for either type of accident to occur.

#### 2.5.2.3 Environmental Impacts of Potential Radiological Launch Accidents

Alternative 1. This section presents a summary of DOE's *Nuclear Risk Assessment for the Mars Science Laboratory Mission Environmental Impact Statement* (DOE 2006a) for the Proposed Action (Alternative 1) described in this DEIS. A more detailed presentation can be found in Section 4.1.4.

Figure 2-19 presents summaries of launch-related probabilities for the proposed MSL mission. These probability summaries were derived by combining the estimated failure probabilities from *Mars Science Laboratory Launch Accident Probability Data For EIS Risk Assessment* (ASCA 2006) and *Delta IV Heavy AIC/AOC Probability Data for Application to MSL DEIS Risk Assessment* (NASA 2006), and DOE's estimated release probabilities (DOE 2006a). As such, the estimated probabilities summarized in Figure 2-19 do not reflect the reliability of any single launch vehicle.

The most likely outcome of implementing the proposed MSL mission, about 92 percent probability, is a successful launch to Mars. The unsuccessful launches (about an 8 percent probability) would result from either a malfunction or a launch accident. Most malfunctions would involve trajectory control malfunctions which would occur late in the ascent profile. This type of malfunction would place the spacecraft on an incorrect trajectory escaping from Earth but leading to failure of the spacecraft to reach Mars. Most launch accidents would lead to destruction of the launch vehicle but would not result in environments that could damage the MMRTG and release some of the $PuO_2$. About 0.4 percent of the time a launch could result in an accident with release of $PuO_2$, but typically not in a large enough quantity to result in discernible radiological consequences (see Section 2.5.2.3.2).

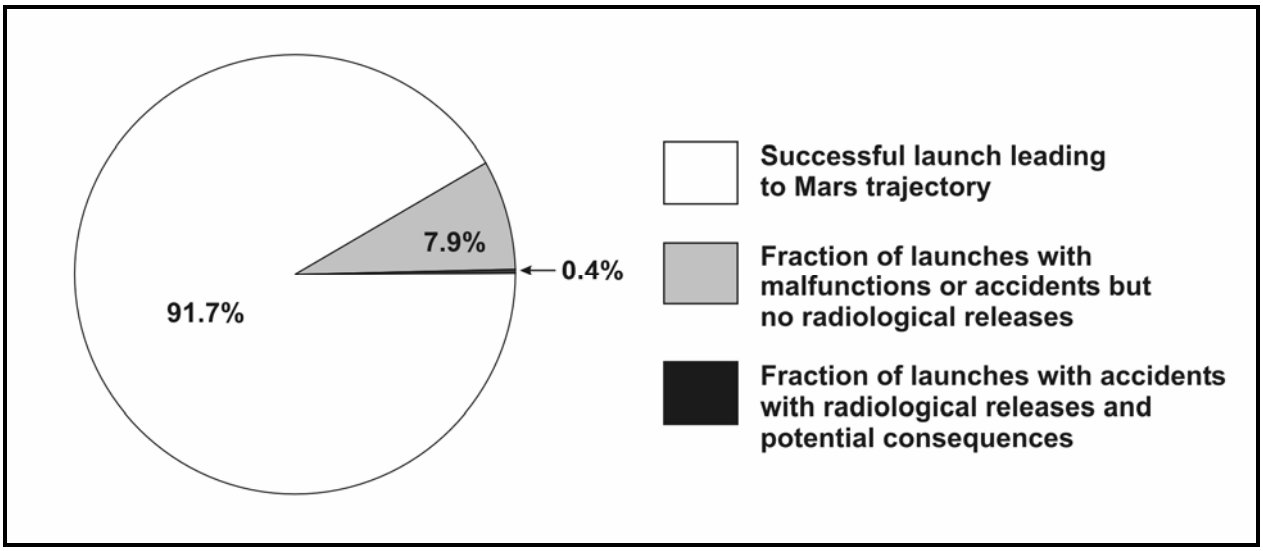


Source: Adapted from ASCA 2006, NASA 2006, and DOE 2006a

**FIGURE 2-19. ESTIMATED LAUNCH-RELATED PROBABILITIES**

Alternative 2. Since a MMRTG would not be used as the source of electrical power for the solar-powered MSL rover under Alternative 2 without RHUs, there would be negligible radiological consequences from a launch accident. The small quantities of radioactive materials in the APXS and DAN science instruments on the rover (see Section 2.1.2) would be negligible compared to that contained in the MMRTG planned for use in the Proposed Action (Alternative 1). In a launch accident, their use would result in contributions to mission risks and related radiological consequences of nominally less than 0.01 percent of those associated with the MMRTG under the Proposed Action (Alternative 1) (DOE 2006b). However, as the MSL mission and spacecraft designs for Alternative 2 mature, NASA may reconsider the need for RHUs to provide additional heat to critical rover components (see Section 2.4.2). In that event, NASA would consider the need for additional environmental documentation.

#### 2.5.2.3.1 The EIS Nuclear Risk Assessment

The nuclear risk assessment for the proposed MSL mission considers (1) potential accidents associated with the launch, and their probabilities and accident environments; (2) the response of the MMRTG to such accidents in terms of the amount of radioactive materials released and their probabilities; and (3) the radiological consequences and mission risks associated with such releases. The risk assessment was based on a typical MMRTG radioactive material inventory of about 58,700 Ci of primarily plutonium-238 (an alpha-emitter with a half life of 87.7 years).

DOE's risk assessment was developed during the time when the candidate launch vehicles being considered by NASA for the MSL mission were the Atlas V 541 and the Delta IV Heavy. A composite approach was taken in DOE's nuclear risk assessment (DOE 2006a) for accident probabilities, potential releases of PuO2 in case of an accident (called source terms), radiological consequences, and mission risks. The

composite approach taken in the risk assessment and reported in this DEIS reflects the state of knowledge at this early stage in the mission with respect to the candidate launch vehicles being considered for the MSL mission.

The risk assessment for the MSL mission began with the identification of the initial launch vehicle system malfunctions or failures and the subsequent chain of accident events that could ultimately lead to the accident environments (*e.g.*, explosive overpressures, fragments, fire) that could threaten the MMRTG. These launch vehicle system failures were based on launch vehicle system reliabilities and estimated failure probabilities (ASCA 2006; NASA 2006).

Failure of the launch vehicle has the potential to create accident environments that could damage the MMRTG and result in the release of $PuO_2$. Based on analyses performed for earlier missions that carried radioisotope devices (RTGs and radioisotope heater units), DOE identified the specific accident environments that could potentially threaten the MMRTG.

DOE determined the response of the MMRTG and MMRTG components to these accident environments and estimated the amount of radioactive material that could potentially be released. Results of DOE's RTG testing and analyses were used to determine if a release of $PuO_2$ from the MMRTG could potentially occur. The amount of $PuO_2$ that could be released to the environment was determined based upon scaling of selected results from previous missions and additional analyses, where appropriate, to reflect conditions specific to the launch vehicle and the MSL mission.

For this risk assessment, the MSL mission was divided into mission phases which reflect principal launch events.

- Phase 0 (Pre-Launch) and Phase 1 (Early Launch): A launch-related accident during these periods could result in ground impact in the launch area with some release of $PuO_2$ from the MMRTG.
- Phase 2 (Late Launch): A launch accident during this period would lead to impact of debris in the Atlantic Ocean with no release of $PuO_2$.
- Phase 3 (Pre-Orbit/Orbit): A launch accident during this period prior to reaching Earth parking orbit could lead to prompt sub-orbital reentry within minutes.
- Phase 4 (Orbit/Escape): A launch accident which occurs after attaining parking orbit could result in orbital decay reentries from minutes to years after the accident.

#### 2.5.2.3.2 Accident Probabilities and Consequences

Section 4.1.4 provides a detailed quantitative discussion of the accident probabilities and associated potential consequences for the proposed MSL mission. For this summary discussion, the total probabilities of an accident with a release of $PuO_2$ are grouped into categories that allow for a descriptive characterization of the likelihood of each accident. For the MSL mission, accidents were identified that are categorized as

either unlikely, very unlikely or extremely unlikely. The categories and their associated probability ranges are:

- unlikely: 1 in 100 to 1 in 10 thousand;
- very unlikely: 1 in 10 thousand to 1 in 1 million; and
- extremely unlikely: less than 1 in 1 million.

The radiological consequences of a given accident that results in a release of radioactive material have been calculated in terms of radiation doses, potential health effects, and land area contaminated at or above specified levels. The radiological consequences have been determined from atmospheric transport and dispersion simulations incorporating both worldwide and launch-site specific meteorological and population data.

Section 4.1.4 describes the risk assessment in greater detail, with the results presented for both mean and 99-th percentile values. For the purposes of this summary, the accident consequences and associated risks are presented only in terms of the mean. The 99-th percentile value reflects the potential for higher radiological consequences to the exposed population at lower probabilities than could occur for all accidents involving a release to the environment. The 99-th percentile consequences are typically 5 to 15 times higher but at probabilities 100 times lower than the mean consequences.

*Consequences of Radiological Release on Human Health*

Human health consequences are expressed in terms of maximum individual dose, collective dose to the potentially exposed population, and the associated health effects. The maximum individual dose is the maximum dose, expressed in units of rem, delivered to a single individual for each accident. Collective dose is the sum of the radiation dose received by all individuals exposed to radiation from a given release, expressed in units of person-rem. Health effects represent statistically estimated additional latent cancer fatalities resulting from an exposure over a 50 year period to a release of radioactive material, and are determined using ICRP-60 health effects estimators (ICRP 1990). The estimated radiological consequences by mission phase and for the overall mission are summarized below.

*Unlikely Accidents Within the Launch Area (within 100 km (62 mi) of the launch site)*

- Phases 0 and 1 (Pre-Launch and Early Launch): Prior to launch, the most likely result of a launch vehicle problem would be a safe hold or termination of the launch. After lift-off, most significant launch vehicle problems would lead to the automatic or commanded activation of on-board safety systems resulting in destruction of the launch vehicle. For both Phases combined, the total probability of an accident resulting in a release is considered to be unlikely, about 1 in 420. The maximum dose received by an individual within the exposed population would have a mean value of about 0.14 rem, which is the equivalent of about 40 percent of the normal annual background dose received by each

member of the population of the United States during a year[6]. The mean collective dose that would be received by all individuals within the potentially exposed local and global populations would be about 740 person-rem, which would result in about 0.4 additional latent cancer fatality within the entire group of potentially exposed individuals. The potentially exposed population can be divided into two groups, the local population and a global population. The local population consists of those persons located within 100 km (62mi) of the launch site. A portion of the $PuO_2$ released in an accident during either of these phases would be transported beyond 100 km (62 mi). In this event, about 40 percent of the estimated radiological consequences would be incurred by the global population beyond 100 km (62 mi) from the launch site.

*Unlikely Accidents Beyond the Launch Area*

- Phase 2 (Late Launch): A launch accident occurring during this phase would not result in a release of $PuO_2$ since undamaged GPHS modules would survive water impact at terminal velocity. There would be no health consequences.
- Phase 3 (Pre-Orbit/Orbit): The total probability of an accident resulting in a release during this phase is considered to be unlikely, about 1 in 1,100. The maximum (mean value) dose received by an individual close to the impact site would be about 0.23 rem, or the equivalent of about two-thirds of the normal annual background dose received by each member of the population of the United States during a year. The collective dose received by all individuals within the potentially exposed global population would be about 6 person-rem, which would result in about 0.003 additional latent cancer fatalities within the exposed population.
- Phase 4 (Orbit/Escape): The total probability of an accident resulting in a release during this phase is considered to be unlikely, about 1 in 830. The maximum (mean value) dose received by an individual close to the impact site would be about 0.7 rem, or the equivalent of about twice the normal annual background dose received by each member of the population of the United States during a year. The collective dose received by all individuals within the potentially exposed global population would be about 64 person-rem, which would result in about 0.03 additional latent cancer fatalities within the exposed population.

*Overall Mission*

- The overall accident probability for the MSL mission is the sum of the accident probabilities for several accident conditions for all mission phases. The most probable of these accident conditions result in the smallest estimated radiological releases and consequences.

  The total probability of an accident resulting in a release across the entire mission is considered to be unlikely, about 1 in 220. The maximum dose

[6] An average of about 0.36 rem per year is received by an individual in the United States from both natural sources and other sources such as medical X-rays; see Section 3.2.5 for further information.

received by an individual within the potentially exposed population would vary with accident and meteorological conditions, and would have a mean value of about 0.3 rem, or about 80% of the normal background dose received annually by each member of the population of the United States. The collective dose received by all individuals within the potentially exposed population (both within 100 km (62 mi) of the launch site and globally) would be about 400 person-rem, and would only have a statistical chance of leading to 0.2 additional latent cancer fatality among the exposed population.

In summary for these unlikely accidents in and near the launch area (Phases 0 and 1), as well as Phase 3 and Phase 4 accidents, the mean health effects are estimated to be small within the potentially exposed population. This estimate assumes no intervention, such as sheltering and exclusion of people from contaminated land areas.

Also, the predicted maximum radiological dose to an individual within the exposed population (*i.e.*, the maximally exposed individual) ranges from very small to less than a rem for the unlikely launch area (Phases 0 and 1) accidents. The dose to the maximally exposed individual for unlikely accidents in Phases 3 and 4 is also less than a rem. None of these potential exposures could lead to short-term radiological effects, only to a statistical increase in the likelihood of cancer.

*Very Unlikely and Extremely Unlikely Accidents*

The very to extremely unlikely range of initial launch vehicle malfunctions or failures evaluated in the risk assessment for this DEIS would result in a number of accidents that could occur at much lower total probabilities but result in higher consequences than the mean consequences. For Phases 0 and 1, the potential accidents were determined to be very unlikely, with total probabilities of release in the range of 1 in 11,000 to 1 in 830,000. These postulated accidents could result in higher releases of the MMRTG inventory (ranging from 0.02 percent to 2 percent), with the potential for higher mean consequences which are about two orders of magnitude greater than the mean estimates for the unlikely accidents summarized above.

For very unlikely events involving ground impact of the entire launch vehicle or parts thereof, with a total probability of release ranging from 1 in 11,000 to 1 in 830,000, the maximally exposed individual could receive a dose ranging from a fraction of a rem up to about 30 rem. Assuming no mitigation actions such as sheltering and exclusion of people from contaminated land areas, the potentially exposed population could incur on the order of up to 60 additional latent cancer fatalities. The higher consequences would be associated with lower probabilities and would also be associated with accidents in which the MMRTG is exposed to the high temperatures of a solid propellant fire.

*Impacts of Radiological Releases on the Environment*

In addition to the potential human health consequences of launch accidents that could result in a release of $PuO_2$, environmental impacts could also include contamination of natural vegetation, wetlands, agricultural land, cultural, archaeological and historic sites, urban areas, inland water, and the ocean.

Potential environmental contamination was evaluated in terms of areas exceeding various screening levels and dose-rate related criteria considered in evaluating the need for land cleanup following radioactive contamination. In the risk assessment for this DEIS, land areas which could be contaminated at or above a level of 0.2 microcuries per square meter (μCi/$m^2$) have been identified. This is a screening level used in prior NASA environmental documentation (*e.g.*, NASA 1989, NASA 1997, NASA 2005b) to identify areas potentially needing further action, such as monitoring or cleanup. The results for the mean land area contaminated at or above a level of 0.2 μCi/$m^2$ are summarized below.

- Phases 0 and 1 (Pre-Launch and Early Launch): 5.6 square kilometers ($km^2$) (2.2 square miles ($mi^2$)).
- Phase 2 (Late Launch): none.
- Phase 3 (Pre-Orbit/Orbit): 0.02 $km^2$ (0.008 $mi^2$).
- Phase 4 (Orbit/Escape): 0.04 $km^2$ (0.02 $mi^2$).

The risk assessment indicates that the unlikely launch area accident (involving the intentional destruction of all launch vehicle stages resulting in ground impact of the spacecraft or portions thereof, including possibly the rover with attached MMRTG, the MMRTG alone, or free GPHS modules) could result in about 2.3 $km^2$ (0.9 $mi^2$) being contaminated above 0.2 μCi/$m^2$. The risk assessment also indicates that in the very unlikely event that the on-board safety systems fail (involving ground impact of the entire launch vehicle), 86 $km^2$ (about 33 $mi^2$) might be contaminated above 0.2 μCi/$m^2$.

Costs associated with potential characterization and cleanup, should decontamination be required, could vary widely ($101 million to $562 million per $km^2$ or about $267 million to $1.5 billion per $mi^2$) depending upon the characteristics and size of the contaminated area. The Price-Anderson Act of 1957, as amended (42 U.S.C. 2210), governs liability and compensation in the event of a nuclear incident arising out of the activities of the DOE. In the case of the MSL mission, DOE retains title to the MMRTG. The MMRTG would, therefore, be subject to Price-Anderson Act provisions. In the unlikely event that an accident were to occur resulting in release of $PuO_2$, affected property owners would be eligible for reimbursement for loss of property due to contamination.

In addition to the potential direct costs of radiological surveys, monitoring, and potential cleanup following an accident, there are potential secondary societal costs associated with the decontamination and mitigation activities due to launch area accidents. Those costs may include: temporary or longer term relocation of residents; temporary or longer term loss of employment; destruction or quarantine of agricultural products, including citrus crops; land use restrictions; restriction or bans on commercial fishing; and public health effects and medical care.

#### 2.5.2.3.3 Mission Risks

To place the estimates of potential health effects due to launch accidents for the proposed MSL mission into a perspective that can be compared with other human

undertakings and events, it is useful to use the concept of risk. Risk is commonly viewed as the possibility of harm or damage. For the MSL mission, public risk is characterized in terms of the expectation of health effects in a statistical sense. The risk for each mission phase and for the overall mission is estimated by multiplying the total probability of a release by the health effects resulting from that release. Risk calculated in this manner can also be interpreted as the probability of one health effect occurring in the exposed population.

*Population Risks*

For the MSL mission, overall population health effects risk is estimated to be about 1 in 1,100. For accidents that may occur in the launch area, only a portion of the total population within 100 km (62 mi) of the launch site would be potentially exposed. The total probability of a health effect within the regional population is about 1 in 1,900, or about 60 percent of the total risk for the overall mission. For the global population (excluding those exposed in the launch area region) the risk would be due to the potential for accidental release occurring from Pre-Launch through Mars trajectory insertion and was estimated to be about 1 in 2,700, or about 40 percent of the total risk.

*Individual Risks*

Individual risk can be interpreted as the probability of an individual in the exposed population incurring a fatal cancer. Due to meteorological conditions prevailing at the time of launch, only a portion of the total regional population may receive some (measurable) radiological exposure.

Even those individuals within the population that might receive the highest radiation exposures, such as those very close to the launch area, would face very small risks. The risk to the maximally exposed individual within the regional population is estimated to be less than 1 in several million for the MSL mission. Most people in the potentially exposed population would have much lower risks.

These risk estimates are small compared to other risks. Annual fatality statistics indicate that in the year 2000 the average individual risk of accidental death in the United States was about 1 in 3,000 per year, while the average individual risk of death due to any disease, including cancer, was about 1 in 130 (see Section 4.1.4.8 of this EIS for additional details).

### 2.5.3 Summary Comparison of the Alternatives

Table 2-7 presents a summary comparison of the Proposed Action (Alternative 1), Alternative 2, and the No Action Alternative in terms of each alternative's capabilities for operating and conducting science on the surface of Mars, the anticipated environmental impacts of normal implementation (*i.e.*, a successful launch to Mars) of each alternative, and the potential environmental impacts in the event of an unlikely launch accident for each alternative.

In terms of operational capabilities, the major difference between the Proposed Action (Alternative 1) and Alternative 2 is the length of time the rovers would be expected to survive and successfully operate and conduct science experiments at a selected

## TABLE 2-7. SUMMARY COMPARISON OF THE MSL MISSION ALTERNATIVES

| | Proposed Action (Alternative 1) | Alternative 2 | No Action Alternative |
|---|---|---|---|
| Rover Power Alternative | MMRTG | Solar Array | Not applicable |
| Functional Capability | Capable of operating for at least one Mars year at landing sites between 60° North and 60° South latitudes on Mars | Limited-lifetime capability for operating at landing sites between 5° North and 20° North latitudes on Mars | Not applicable |
| Science Capability | Capable of accomplishing all science objectives at any scientifically desirable landing site between 60° North and 60° South latitudes | Capable of accomplishing all science objectives only for landing sites restricted to 15° North latitude<br>Capable of accomplishing minimum science objectives for landing sites between 5° North and 20° North | No science achieved |
| Anticipated Environmental Impacts | Short-term impacts associated with exhaust emissions from the launch vehicle during a normal launch | Short-term impacts associated with exhaust emissions from the launch vehicle during a normal launch | No impacts |
| Potential Environmental Impacts in the Unlikely Event of a Launch Accident | Potential impacts associated with combustion of released propellants and falling debris<br>Potential radiological impacts associated with unlikely release of some of the $PuO_2$ from the MMRTG | Potential impacts associated with combustion of released propellants and falling debris<br>Possible use of RHUs to provide additional heat for the rover could result in potential radiological impacts associated with unlikely release of some of the $PuO_2$ from the RHUs | No potential impacts |

landing site. The capability to operate the rover within a broad range of latitudes is important because doing so maintains NASA's flexibility to select the most scientifically interesting location on the surface and fulfill the purpose and need for the MSL mission as discussed in Chapter 1 of this EIS. The No Action Alternative would not fulfill the purpose and need for the MSL mission.

In terms of environmental impacts, normal implementation of either the Proposed Action (Alternative 1) or Alternative 2 would primarily yield short-term impacts to air quality from the launch vehicle's exhaust (see Section 2.5.2.1). Should an unlikely launch accident occur for either of these alternatives, potential environmental impacts would be

primarily associated with combustion products from released propellants and from falling debris (see Section 2.5.2.2). For the Proposed Action (Alternative 1), an unlikely launch accident could result in a release of some of the $PuO_2$ from the MMRTG, which potentially could result in consequences to human health and the environment (see Section 2.5.2.3). With the No Action Alternative, no environmental impacts would occur since there would be no launch, but none of the planned science would be achieved.

This page intentionally left blank.

# 3 DESCRIPTION OF THE AFFECTED ENVIRONMENT

This chapter of the Draft Environmental Impact Statement (DEIS) for the Mars Science Laboratory (MSL) mission briefly discusses the local and global areas that could be affected by implementing the Proposed Action (Alternative 1), Alternative 2, or the No Action Alternative. The Alternatives are described in Chapter 2. This document is a Tier 2 mission-specific DEIS under NASA's *Final Programmatic Environmental Impact Statement for the Mars Exploration Program* (MEP PEIS) (NASA 2005a). The MEP PEIS addressed in general the regional area surrounding Cape Canaveral Air Force Station (CCAFS) and the Kennedy Space Center (KSC), Florida, and the global environment that could be affected if any one of the alternatives in the PEIS is implemented. As a tiered document, the MSL DEIS supplements that discussion. Implementing the No Action Alternative (*i.e.,* discontinue the MSL mission) would result in no impacts to the existing environment. The launch opportunity for the proposed MSL mission would occur during September – November 2009; another opportunity would occur 26 months later.

The MEP PEIS used other National Environmental Policy Act (NEPA) documentation such as the U.S. Air Force's (USAF) *Final Environmental Impact Statement for the Evolved Expendable Launch Vehicle Program* (USAF 1998), *Final Supplemental Environmental Impact Statement for the Evolved Expendable Launch Vehicle Program* (USAF 2000), and institutional documents such as the CCAFS *Integrated Natural Resource Management Plan* (USAF 2001) and the KSC *Environmental Resources Document* (NASA 2003) as principal sources of information on the affected environment. Where relevant, these documents are summarized in this chapter.

Section 3.1 describes the affected environment at and surrounding CCAFS, and Section 3.2 discusses the global environment.

## 3.1 CAPE CANAVERAL AIR FORCE STATION REGIONAL AREA

CCAFS is on the east coast of Florida in Brevard County on a barrier island called the Canaveral Peninsula. The regional area includes the following six counties: Brevard, Indian River, Orange, Osceola, Seminole, and Volusia (the Six-County Region) (Figure 3-1). The Six-County Region covers approximately 13,000 square kilometers ($km^2$) (about 5,000 square miles ($mi^2$)) of land (USBC 2005a). CCAFS is bounded on the west by the Banana River, on the north by KSC, on the east by the Atlantic Ocean, and on the south by Port Canaveral (Figure 3-2). The CCAFS regional area is described in more detail in Section 3.1 of the MEP PEIS (NASA 2005a).

### 3.1.1 Land Resources

CCAFS is about 64 $km^2$ (about 25 $mi^2$) in area. Major land uses include launch operations and launch support, restricted development, port operations, industrial area, and airfield operations. Approximately 25 percent of CCAFS is developed, with many active and deactivated space launch complexes (SLC) and associated support facilities. CCAFS is 7.2 kilometers (km) (4.5 miles (mi)) at its widest point with elevations ranging from sea level to 6 meters (m) (20 feet (ft)) above mean sea level (USAF 2001).

The proposed MSL mission would be launched either on an Atlas V launch vehicle from SLC-41, located in the southernmost section of KSC (NASA has permitted CCAFS to use SLC-41 and the surrounding land), or a Delta IV launch vehicle from SLC-37, located on the northeastern section of CCAFS.

Within the regional area, the following land use and land cover categories have been classified: urban; agriculture; rangeland; upland forests; water; wetlands; barren land; and transportation, communication, and utilities rights-of-way. Land use surrounding CCAFS and KSC includes an active sea port, recreation and wildlife management areas, and agricultural uses that include crops, citrus, and pasturage.

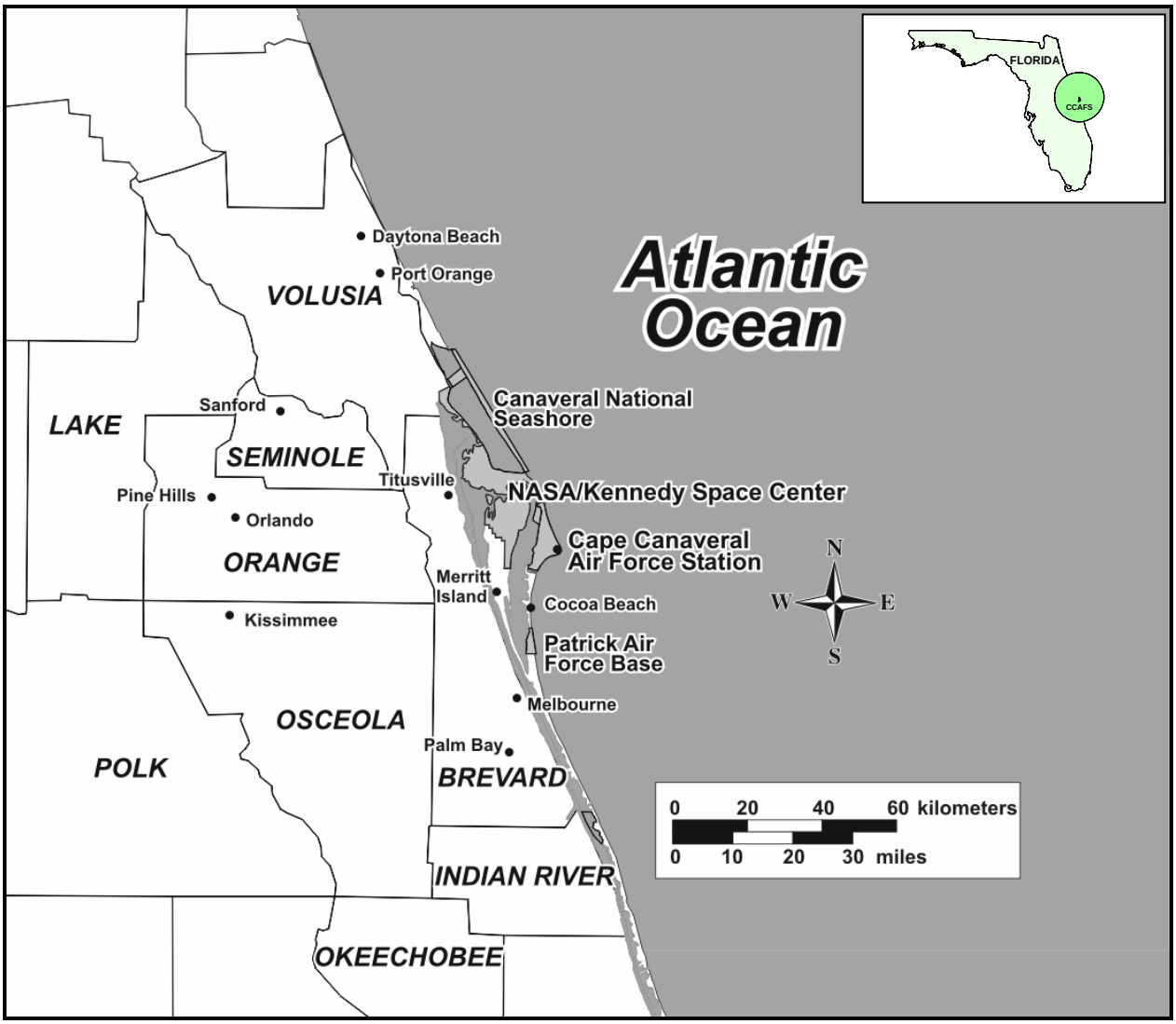


**FIGURE 3-1. THE REGIONAL AREA NEAR CCAFS**

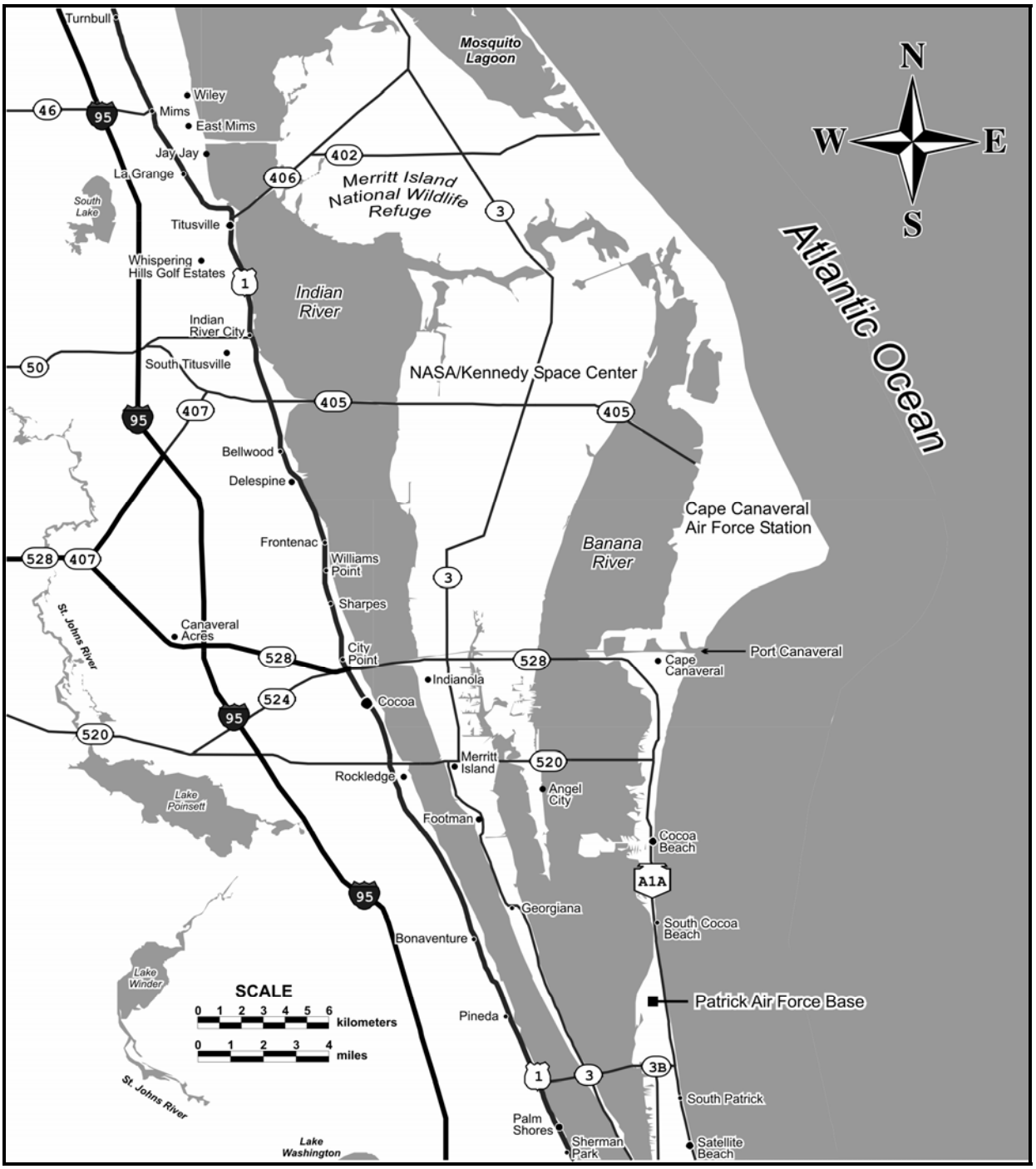


**FIGURE 3-2. CCAFS AND THE SURROUNDING AREA**

## 3.1.2 Air Resources

### 3.1.2.1 Climate

In general, prevailing winds occur from the east during September and October and from the north in November. Sea breezes (winds from the ocean towards land) and

land breezes (winds from land towards the ocean) commonly occur daily during the fall. Sea breezes occur at the surface during the day, and land breezes occur at night (USAF 1998; USAF2001). CCAFS is vulnerable to hurricanes and associated storm tides. The Atlantic hurricane season occurs officially from June 1 to November 30 (NOAA 2006). Historic data show that the storm tide height for a Category 5 (strongest) hurricane could reach to 4.6 m (15 ft), inundating most of CCAFS (USAF 2001).

#### 3.1.2.2 Air Quality

Table 3-1 provides Federal and State air quality standards for the six criteria pollutants established under the National Ambient Air Quality Standards (NAAQS) and compares the ambient concentrations in Brevard County with these standards. The Florida standards closely follow the NAAQS except for particulate matter less than 2.5 micrometers in diameter and sulfur dioxide (Florida Administrative Code (FAC) 62-204.240).

**TABLE 3-1. SUMMARY AIR QUALITY DATA NEAR CCAFS FOR 2004**

| Criteria Pollutant | Federal Standard [(a)] | | Florida State Standard | 2004 Ambient Concentrations |
|---|---|---|---|---|
| Carbon Monoxide (CO) | | | | |
| 1-hour Average | 35 ppm | Primary | 35 ppm | 2 ppm |
| 8-hour Average | 9 ppm | Primary | 9 ppm | 2 ppm |
| Lead (Pb) | | | | |
| Quarterly Average | 1.5 μg/m$^3$ | Both Primary & Secondary | 1.5 μg/m$^3$ | 0.2 μg/m$^3$ |
| Nitrogen Dioxide ($NO_2$) | | | | |
| Annual Arithmetic Mean | 0.053 ppm | Both Primary & Secondary | 0.053 ppm | 0.01 ppm |
| Ozone ($O_3$) | | | | |
| 1-hour Average | 0.12 ppm | Both Primary & | 0.12 ppm | 0.078 ppm |
| 8-hour Average | 0.08 ppm | Secondary | no standard | 0.071 ppm |
| Particulate Matter ($PM_{10}$) | | | | |
| Annual Arithmetic Mean | 50 μg/m$^3$ | Both Primary & | 50 μg/m$^3$ | 17 μg/m$^3$ |
| 24-hour Average | 150 μg/m$^3$ | Secondary | 150 μg/m$^3$ | 54 μg/m$^3$ |
| Particulate Matter ($PM_{2.5}$) | | | | |
| Annual Arithmetic Mean | 15 μg/m$^3$ | Both Primary & | no standard | 8.6 μg/m$^3$ |
| 24-hour Average | 65 μg/m$^3$ | Secondary | no standard | 23 μg/m$^3$ |
| Sulfur Dioxide ($SO_2$) | | | | |
| Annual Arithmetic Mean | 0.03 ppm | Primary | 0.02 ppm | 0.001 ppm |
| 24-hour Average | 0.14 ppm | Primary | 0.10 ppm | 0.005 ppm |
| 3-hour Average | 0.5 ppm | Secondary | 0.5 ppm | 0.011 ppm |

Sources: EPA 2006b, FAC 62-204.240, FDEP 2004

(a) Federal primary standards are levels of air quality necessary, with an adequate margin of safety, to protect the public health. Federal secondary standards are levels of air quality necessary to protect the public welfare from any known or anticipated adverse effects of a pollutant.

μg/m$^3$ = micrograms per cubic meter

ppm = parts per million

Ambient concentrations of criteria pollutants for Brevard County during 2004 did not exceed the Federal or State standards. Brevard County is considered by the Florida Department of Environmental Protection (FDEP) to be in attainment or unclassifiable with respect to the criteria pollutants (EPA 2006a; FDEP 2004). Currently, CCAFS has a Clean Air Act Title V air operating permit, which is due to expire in January 2007 (FDEP 2002).

### 3.1.3 Ambient Noise

Ambient noise levels at CCAFS range from quiet (40-55 A-weighted decibels (dBA)) in isolated areas to 75 dBA or more due to infrequent launch activities, aircraft movement, and other support related activities (NASA 1998).

### 3.1.4 Geology and Soils

Soils at CCAFS are highly permeable and allow water to quickly percolate into the ground and have a high buffering capacity (NASA 1998). No prime or unique farmland is present at CCAFS (USAF 1998).

### 3.1.5 Hydrology and Water Quality

#### 3.1.5.1 Surface Waters

Major water bodies surrounding KSC and CCAFS include the Atlantic Ocean and the inland estuary consisting of the Indian River, the Banana River, and the Mosquito Lagoon (Figure 3-2). The inland estuary has been designated as an Estuary of National Significance, and contains Outstanding Florida Waters and Aquatic Preserves (NASA 2003, EPA 2006c). Freshwater inputs to the estuary include direct precipitation, storm water runoff, discharges from impoundments, and groundwater seepage (NASA 2003).

Surface drainage within CCAFS launch areas is generally westward toward the Banana River. CCAFS launch areas do not lie within the 100-year floodplain and are not within a wetland (USAF 2002). There are no National or State-designated wild or scenic rivers on or near KSC or CCAFS (NPS 2005, FS 258.501).

#### 3.1.5.2 Surface Water Quality

Surface water quality has been characterized as generally good. The waters tend to be alkaline and have good buffering capacity. Water samples from inland bodies of water near CCAFS and KSC have indicated that some polyaromatic hydrocarbons, one pesticide (dieldrin), and some metals were measured above detection limits (NASA 2003).

#### 3.1.5.3 Groundwater Sources

Three aquifers underlie CCAFS, including the surficial aquifer, the secondary semi-confined aquifer, and the Floridan Aquifer. The surficial aquifer is largely recharged by rainfall percolation and surface runoff and is used by the areas near CCAFS for non-potable uses; however, Mims and Titusville, located about 16 km (10 mi) northwest

of CCAFS, and Palm Bay, located about 64 km (40 mi) south of CCAFS, use this aquifer for public water supply. Surface recharge of the secondary, semi-confined aquifer is minor and depends on leakage through surrounding lower-permeability soils. The Floridan Aquifer is the primary source of potable water in central Florida and CCAFS (USAF 1998, NASA 2003).

#### 3.1.5.4 Groundwater Quality

In the immediate vicinity of CCAFS, groundwater from the Floridan Aquifer is highly mineralized. Water quality in the secondary semi-confined aquifer varies from moderately brackish to brackish. Groundwater quality in the surficial aquifer system at CCAFS is generally good due to immediate recharge, active flushing, and a lack of development. Groundwater from the surficial aquifer meets Florida's criteria for potable water and national drinking water criteria for all parameters other than iron and total dissolved solids (USAF 1998).

There are several sites in Florida listed as manufacturers or users of perchlorates; however, Florida is not listed as having known release sites (EPA 2006d). Perchlorate has not been detected in drinking water supplies for KSC, CCAFS, or adjacent communities (EPA 2006e). Recent sampling and analysis of groundwater at CCAFS did not detect perchlorate contamination (Chambers 2005).

#### 3.1.5.5 Offshore Environment

From the coastline, sandy shoals lead to a deepening sea floor. Offshore currents usually reflect the general northern flow of the Gulf Stream (NOAA 1980). Studies of water movements in the area indicate surface to bottom shoreward currents, although wind generally determines current flow at the surface. In general, prevailing winds occur from the east during September and October and from the north in November.

### 3.1.6 Biological Resources

The region has several terrestrial and aquatic conservation and special designation areas (*e.g.*, wildlife management areas and aquatic preserves). These areas serve as wildlife habitat and occupy about 25 percent (about 405,000 ha (1 million ac)) of the total land and water area within the region.

#### 3.1.6.1 Terrestrial Resources

The majority of the land at and near CCAFS, including KSC, the Merritt Island National Wildlife Refuge, the Mosquito Lagoon, and the Cape Canaveral National Seashore, is undeveloped and in a near-natural state. These areas host a variety of plant communities that support many resident and transient animal species. The U.S. Fish and Wildlife Service (FWS) National Wetlands Inventory, conducted in 1994, identified a total of 905 ha (2,235 ac) of wetlands on CCAFS (USAF 1998).

#### 3.1.6.2 Aquatic Resources

The aquatic environment surrounding CCAFS provides diverse fish habitat which supports many shore bird species, and sport, commercial, and recreational fishing. The Atlantic beaches at CCAFS, KSC, and the Canaveral National Seashore are important to nesting sea turtles. The Mosquito Lagoon is considered among the best oyster and clam harvesting areas on the east coast.

The Magnuson Fishery Conservation and Management Act of 1976, as amended (16 U.S.C. 1801 *et seq*.), mandates the conservation of essential fish habitat. The USAF has a programmatic consultation in place with the National Marine Fisheries Service on essential fish habitat regarding Atlas V and Delta IV launches from CCAFS (USAF 2000).

#### 3.1.6.3 Threatened and Endangered Species

The FWS currently recognizes 112 endangered or threatened and 22 candidate animal and plant species in the state of Florida (FWS 2006). The State of Florida considers 118 animal species as threatened, endangered, or of special concern (FFWCC 2006) and 55 plant species as threatened or endangered (FDACS 2006) for the state. Brevard County has listed 53 plant species as threatened, endangered, or commercially exploited (BCBCC 2003). Seven reptile species, four bird species, and seven mammal species on or near CCAFS are included on the Federal threatened or endangered species list. The State of Florida has listed 12 species of plants, six species of reptiles, seven species of birds, and seven species of mammals as threatened or endangered, and a total of 13 species of reptiles, birds, and mammals as species of special concern, on or near CCAFS.

The Federal and State listed species occurring on or near CCAFS include the Florida manatee, sea turtles (loggerhead, green, and leatherback), the southeastern beach mouse, the wood stork, the Florida scrub jay, least tern, and whales (finback, humpback, North Atlantic right, and sei) (USAF 2001; BCBCC 2003; FDACS 2006; FFWCC 2006). CCAFS has management plans in place for conservation of threatened or endangered species (*e.g.,* lighting management plans to minimize impacts from nighttime lights on sea turtle nesting beaches, designated manatee refuges and sanctuaries in selected inland waterways around CCAFS/KSC) occurring on land controlled by the USAF (USAF 2001).

### 3.1.7 Socioeconomics

Socioeconomic resources in the Six-County Region surrounding CCAFS include the population, economy, transportation system, public and emergency services, and recreational opportunities. These resources are described below.

#### 3.1.7.1 Population

The census population in 2000 and projected population for 2009 for the Six-County Region are presented in Table 3-2. The City of Cape Canaveral is the nearest community to CCAFS, with a population of roughly 9,500, located approximately 1 km

(0.62 mi) from CCAFS on the south side of Port Canaveral. Titusville and Merritt Island, to the west of CCAFS, each have approximately 40,000 residents. In addition, Palm Bay and the Melbourne area, which are communities to the south of CCAFS, have populations between 80,000 and 100,000 (BEBR 2004).

**TABLE 3-2. POPULATION OF THE SIX-COUNTY REGION**

| Geographic Area | Census Population 2000 | Projected Population 2009 |
|---|---|---|
| **Florida** | 15,982,378 | 19,307,882 |
| **County** | | |
| Brevard | 476,230 | 568,912 |
| Indian River | 112,947 | 142,275 |
| Orange | 896,344 | 1,155,538 |
| Osceola | 172,493 | 277,465 |
| Seminole | 365,196 | 447,658 |
| Volusia | 443,343 | 529,033 |
| **Six-County Region** | **2,466,553** | **3,120,881** |

Sources: EDR 2005, USBC 2005a, and BEBR 2004

Note: Projected population values do not represent absolute limits to growth; for any county, the future population may be above or below the projected value.

The following population groups reside within this region: white, black or African American, American Indian and Alaska native, Asian, native Hawaiian and other Pacific Islander, some other race, two or more races, and Hispanic or Latino (of any race) (USBC 2000b).

Table 3-3 presents the minority population in 2000 and the projected minority population for 2009 for each of the counties in the Six-County Region.

Persons whose incomes are less than the poverty threshold are defined as low-income persons by the Council on Environmental Quality (CEQ 1997). The percentage estimate of persons living below the poverty level in 2002 is as follows: 12.1 percent (United States), 12.8 percent (Florida), and 11.3 percent (Six-County Region) (BEBR 2004; USBC 2002).

#### 3.1.7.2 Economy

An estimated 1,282,610 people were employed in the Six-County Region in 2003 with an estimated unemployment rate of 5.1 percent (BEBR 2004).

The Six-County Region's economic base is tourism and manufacturing, with tourism attracting more than 20 million visitors annually. Multiple theme parks, along with KSC,

are among the most popular tourist attractions in the State. In addition, the cruise and cargo industries at Port Canaveral contribute to the central Florida economy.

Industrial sectors in the Six-County Region that provided significant employment in 2000 included: education, health and social services; arts, entertainment, recreation, accommodation and food services; retail trade; and professional, scientific, management, administrative, and waste management services (USBC 2000c).

**TABLE 3-3. MINORITY POPULATION OF THE SIX-COUNTY REGION**

| Geographic Area | Minority Population 2000 | Percent Minority 2000 | Projected Minority Population 2009 | Projected Percent Minority 2009 |
|---|---|---|---|---|
| **Florida** | 5,529,903 | 34.6 | 7,316,297 | 37.9 |
| **County** | | | | |
| Brevard | 77,625 | 16.3 | 103,937 | 18.3 |
| Indian River | 18,749 | 16.6 | 29,551 | 20.8 |
| Orange | 380,946 | 42.5 | 569,001 | 49.2 |
| Osceola | 69,687 | 40.4 | 138,238 | 49.8 |
| Seminole | 90,569 | 24.8 | 121,906 | 27.2 |
| Volusia | 80,245 | 18.1 | 108,911 | 20.6 |
| **Six-County Region** | **717,821** | **29.1** | **1,071,544** | **34.3** |

Sources: EDR 2005, BEBR 2004, and USBC 2000b

The employment pool at CCAFS includes about 10,000 military and civilian personnel, all associated with the USAF (CCAFS 2006). Military personnel are attached to the 45th Space Wing at Patrick Air Force Base, approximately 32 km (20 mi) to the south of CCAFS (USAF 2001). A majority of the employed are contractor personnel from companies associated with missile testing and launch vehicle operations.

Statewide, the space industry employs approximately 43,000 workers with 27,000 employees (military, civil service, and other government and contract employees) working directly on CCAFS and KSC (USAF 2002). The presence of these employees causes a chain of economic reactions throughout the Six-County Region. The space industry is estimated to generate over $4 billion annually in the Florida economy and contribute close to $1.7 billion directly and indirectly to the local economy (USAF 2002). The gross state product of the overall economic activity of Florida is estimated to be over $520 billion (BEA 2004).

#### 3.1.7.3 Transportation Systems

The Six-County Region is supported by a network of Federal, State and County roads, rail service, three major airports, and a sea port with cargo and cruise terminals (USAF

2002). CCAFS has a runway for government aircraft, delivery of launch vehicle components, and air freight associated with the operation of CCAFS launch complexes.

#### 3.1.7.4 Public and Emergency Services

The Six-County Region has a network of hospitals. Emergency medical services for CCAFS personnel are provided at the Occupational Health Facility at KSC. Additional health care services are provided by nearby public hospitals located outside of CCAFS.

CCAFS obtains its potable water under contract from the City of Cocoa water system and uses approximately 2.6 million liters (0.7 million gallons) per day (USAF 2002). The Cocoa water system draws its supplies from the Floridan Aquifer. The water distribution system at CCAFS is sized to accommodate the short-term high-volume flows required for launches.

A mutual-aid agreement exists between the City of Cape Canaveral, Brevard County, KSC, and the range contractor at CCAFS for reciprocal support in the event of an emergency or disaster (USAF 1998). Further, CCAFS and the Brevard County Office of Emergency Management have agreements for communications and early warning in the event of a launch accident.

Range Safety at CCAFS monitors launch surveillance areas to ensure that risks to people, aircraft, and surface vessels are within acceptable limits. Control areas and airspace are closed to the public as required. The USAF is responsible for disseminating a Notice to Aviators through the Federal Aviation Administration (FAA), and air traffic in a FAA-designated area around the launch corridor is controlled. Radar surveillance for intruding aircraft within a 93 km (50 nautical mi) radius of the launch site is conducted beginning 30 minutes prior to a scheduled launch and continuing until the launch is complete. The USAF also ensures that a Notice to Mariners within a predetermined impact debris corridor is disseminated beginning 10 working days prior to a launch. The U.S. Coast Guard transmits marine radio broadcast warnings to inform vessels of the effective closure time for the sea impact debris corridor. In addition, warning signs are posted in various Port Canaveral areas for vessels leaving port (USAF 1998). In addition, Patrick Air Force Base maintains an Internet website and toll-free telephone number with launch hazard area information for mariners and restricted airspace information for pilots.

#### 3.1.7.5 Recreation

There is an abundance of public recreational opportunities in the Six-County Region with beaches, waterways, lakes, open land, and parks. Within the confines of CCAFS, access to recreational areas and facilities is limited to CCAFS personnel.

#### 3.1.7.6 Cultural/Historic/Archaeological Resources

Cultural facilities at CCAFS include the Air Force Space and Missile Museum and the original NASA Mission Control Center. Many archaeological sites at CCAFS/KSC containing prehistoric and/or historic components have been identified (USAF 2002). Many of these sites are listed or deemed eligible for listing on the National Register of

Historic Places (NRHP). A number of launch pads and the original Mission Control Center at CCAFS are listed on the NRHP and form a National Historic Landmark District (NPS 2006). No NRHP listed or eligible prehistoric or historic archaeological sites have been identified at either SLC-37 or SLC-41.

## 3.2 THE GLOBAL ENVIRONMENT

In accordance with Executive Order 12114, *Environmental Effects Abroad of Major Federal Actions*, this section provides a general overview of the global environment. Basic descriptions of the troposphere and stratosphere, global population distribution and density, distribution of land surface types, and a brief discussion of background radiation and the global atmospheric inventory of plutonium are included.

### 3.2.1 Troposphere

The troposphere is the atmospheric layer closest to the Earth's surface where all life exists and virtually all weather occurs (Figure 3-3). In general, the troposphere is well mixed and aerosols are removed in a short period of time (ranging from a few days to a few weeks) as a result of both the mixing within this layer and scavenging by precipitation. Removal of most emissions from rocket exhaust products from the troposphere occurs over a period of less than one week, preventing a buildup of these products on a global level (USAF 1998).

### 3.2.2 Stratosphere

The stratosphere extends from the tropopause up to an altitude of approximately 50 km (31 mi) (Figure 3-3). In general, vertical mixing is limited within the stratosphere, providing little transport between the layers above (mesosphere) and below (troposphere). The lack of vertical mixing and exchange between these layers provides for extremely long residence times, on the order of months, causing the stratosphere to act as a reservoir for certain types of atmospheric pollution (USAF 1998). The USAF has documented estimates of the total annual input of rocket exhaust products to the stratosphere from 23 Atlas, Delta, and Titan launches from CCAFS in 1995 and another 23 launches in 1996 (USAF 1998). The total estimated annual input to the stratosphere from these launches averaged about 376 metric tons (414 tons) per year of particulate matter, 1.4 metric tons (1.5 tons) per year of oxides of nitrogen, 725 metric tons (799 tons) per year of carbon monoxide, and 188 metric tons (208 tons) per year of chlorine compounds.

The Montreal Protocol is designed to protect the stratospheric ozone layer by phasing out production and consumption of substances that deplete the ozone layer. Measurements have shown that atmospheric concentrations of ozone-depleting substances are decreasing, indicating that emissions have been greatly reduced (EPA 2003).

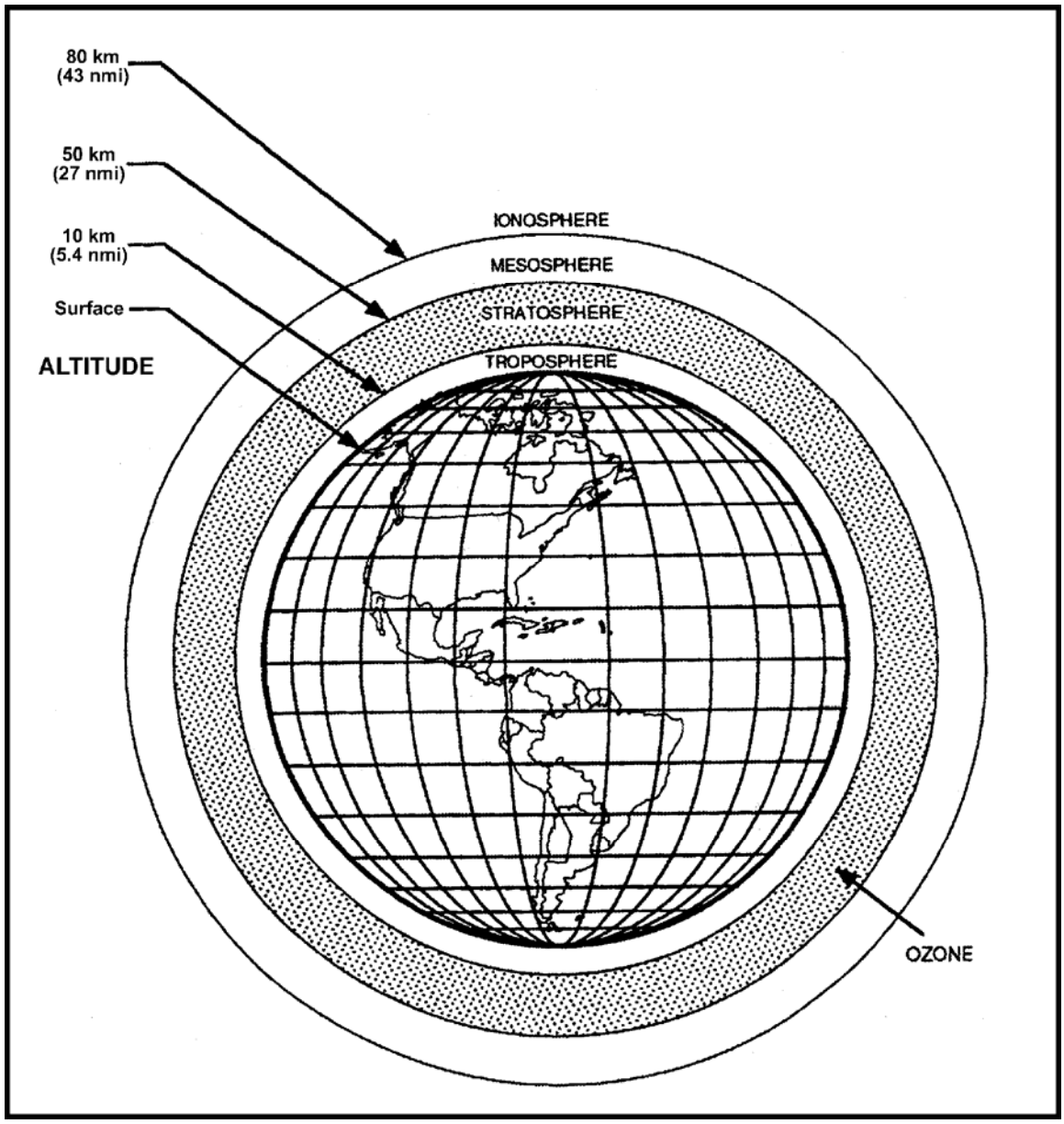


**FIGURE 3-3. ATMOSPHERIC LAYERS AND THEIR ESTIMATED ALTITUDE**

### 3.2.3 Global Population Distribution

The distribution of the Earth's population is an important characteristic in considering the potential consequences of accident scenarios. For this purpose, global population statistics and other information are distributed among equal-sized areas (cells) of the Earth' surface. The cells are derived by first dividing the Earth from pole to pole into 20 latitude bands of equal area. Each latitude band is then segmented into 36 equal-sized cells, for a total of 720 cells. Each cell covers an area of 708,438 square kilometers (273,528 square miles) (HNUS 1992).

The total population of the Earth in 2009 is projected to be approximately 6.75 billion people (USBC 2005b). Table 3-4 lists the estimated global distribution of the projected population in 2009 across each of the 20 equal-area latitude bands. The greatest population densities occur in a relatively narrow grouping of the five Northern bands between latitudes 44° North and 11° North (bands 4 through 8). The State of Florida lies within latitude band 6. Due to launch azimuth angle constraints, launches from CCAFS to other solar system objects (*e.g.*, planets such as Mars) would partially circle the Earth between 28° North and 28° South latitudes (bands 6 through 15) before departing for interplanetary space.

**TABLE 3-4. GLOBAL POPULATION AND SURFACE CHARACTERISTICS BY LATITUDE BAND**

| Latitude Band | Latitude Range, degrees | Band Population Estimate for 2009, millions | Band Surface Fractions | | | |
|---|---|---|---|---|---|---|
| | | | Water | Land | Land Rock Fraction | Land Soil Fraction |
| 1 | 90N – 64N | 3.9 | 0.7332 | 0.2668 | 1.0 [(a)] | 0.0 [(a)] |
| 2 | 64N – 53N | 174.3 | 0.4085 | 0.5915 | 1.0 [(a)] | 0.0 [(a)] |
| 3 | 53N – 44N | 518.6 | 0.4456 | 0.5544 | 0.251 [(a)] | 0.749 [(a)] |
| 4 | 44N – 36N | 903.5 | 0.5522 | 0.4478 | 0.251 | 0.749 |
| 5 | 36N – 30N | 1,092.1 | 0.5718 | 0.4282 | 0.153 | 0.847 |
| 6 | 30N – 23N | 1,346.7 | 0.6064 | 0.3936 | 0.088 | 0.912 |
| 7 | 23N – 17N | 617.5 | 0.6710 | 0.3290 | 0.076 | 0.924 |
| 8 | 17N – 11N | 598.0 | 0.7514 | 0.2486 | 0.058 | 0.924 |
| 9 | 11N – 5N | 475.4 | 0.7592 | 0.2408 | 0.077 | 0.923 |
| 10 | 5N – 0 | 164.1 | 0.7854 | 0.2146 | 0.084 | 0.916 |
| 11 | 0 – 5S | 189.3 | 0.7630 | 0.2370 | 0.044 | 0.956 |
| 12 | 5S – 11S | 261.4 | 0.7815 | 0.2185 | 0.055 | 0.945 |
| 13 | 11S – 17S | 98.5 | 0.7799 | 0.2201 | 0.085 | 0.915 |
| 14 | 17S – 23S | 103.4 | 0.7574 | 0.2426 | 0.089 | 0.911 |
| 15 | 23S – 30S | 118.1 | 0.7796 | 0.2204 | 0.092 | 0.980 |
| 16 | 30S – 36S | 70.5 | 0.8646 | 0.1354 | 0.112 | 0.888 |
| 17 | 36S – 44S | 13.5 | 0.9538 | 0.0462 | 0.296 | 0.704 |
| 18 | 44S – 53S | 0.9 | 0.9784 | 0.0216 | 0.296 [(a)] | 0.704 [(a)] |
| 19 | 53S – 64S | 0.2 | 0.9930 | 0.0070 | 1.0 [(a)] | 0.0 [(a)] |
| 20 | 64S – 90S | -- | 0.3863 | 0.6137 | 1.0 [(a)] | 0.0 [(a)] |

Sources: Population estimates adapted from USBC 2005b and SEDAC 2005;
Surface characteristics adapted from HNUS 1992

(a) Assumed values.
Note: N = North Latitude, S = South Latitude

### 3.2.4 Surface Characteristics

The worldwide distribution of surface types is also an important characteristic in considering the potential consequences of accident scenarios. Table 3-4 provides a breakdown of the total land fraction for each of the 20 latitude bands (HNUS 1992). The total land fraction was further subdivided by the fraction consisting of soil or rock cover. For the most densely populated bands (bands 4 through 8), the land fraction varies from

about 25 percent in band 8 to about 45 percent in band 4, and is predominately soil (from about 75 percent in band 4 to about 92 percent in bands 7 and 8).

### 3.2.5 Background Radiation

#### 3.2.5.1 Natural and Manmade Sources

The general population is exposed to various sources of natural and human-made radiation. These sources are divided into six broad categories: (1) cosmic radiation (from space), (2) external terrestrial radiation or groundshine (from naturally occurring radiation in rocks and soil), (3) internal radiation (from inhalation or ingestion), (4) consumer products (from smoke detectors, airport x-ray machines, televisions), (5) medical diagnosis and therapy (*e.g.,* diagnostic x-rays, nuclear medical procedures), and (6) other sources (*e.g.,* nuclear power plants, transportation).

Dose is the amount of ionizing radiation energy deposited in body tissues via various exposure pathways and is expressed in units of measurement called rems. An average person in the United States receives a total dose of about 0.36 rem per year from all of these sources (see Table 3-5). The largest dose, about 66 percent of the yearly total, is received from internal radiation, where exposure has occurred as a result of inhalation or ingestion of radioactive material. Exposure to radon, the largest component of background radiation, accounts for about 55 percent or 0.2 rem of the yearly total dose received. Exposure to cosmic radiation and groundshine collectively, is about 16 percent of the yearly total dose, the same percentage contributed from medical diagnosis and therapy. The average yearly dose from consumer products is about 3 percent. For perspective, a modern chest x-ray results in a dose of about 0.006 rem and about 0.065 rem is received from a diagnostic pelvic and hip x-ray.

Due to its low elevation, Florida receives less exposure to cosmic radiation than most parts of the country (HPS 2004). Assessments performed by the U.S. Geological Survey and the U.S. Environmental Protection Agency indicate that KSC, CCAFS and adjacent communities have a low potential for geologic radon (USGS 1995). In other categories of background radiation exposure, Florida is consistent with the national average.

#### 3.2.5.2 Worldwide Plutonium Levels

Plutonium-238 (Pu-238) exists in the environment as a result of atmospheric testing of nuclear weapons and a 1964 launch accident. The following information provides a perspective against which to compare the scope of postulated incremental releases of plutonium from potential mission accidents.

Between 1945 and 1974, aboveground nuclear weapons tests released about 440,000 curies (Ci) of plutonium to the environment (AEC 1974). About 97 percent (about 430,000 Ci) of this plutonium was Pu-239 and Pu-240, essentially identical isotopes with respect to chemical behavior and radiological emission energies. The remainder consists primarily of Pu-238 (about 9,000 Ci), along with much smaller amounts of Pu-241 and Pu-242. (Some of the Pu-238 and Pu-241 has decayed since the time of release.)

**TABLE 3-5. AVERAGE ANNUAL EFFECTIVE DOSE EQUIVALENT OF IONIZING RADIATION TO A MEMBER OF THE U.S. POPULATION**

| Source | Effective Dose Equivalent [a] | |
|---|---|---|
| | rem per year | percent of total |
| Natural | | |
| Radon [b] | 0.2 | 55 |
| Cosmic | 0.027 | 8 |
| Terrestrial | 0.028 | 8 |
| Internal | 0.039 | 11 |
| Subtotal — Natural | 0.294 | 82 |
| Manmade | | |
| Medical | | |
| X-ray diagnosis | 0.039 | 11 |
| Nuclear medicine | 0.014 | 4 |
| Consumer products | 0.010 | 3 |
| Other | | |
| Occupational | < 0.001 | < 0.03 |
| Nuclear fuel cycle | < 0.001 | < 0.03 |
| Fallout | < 0.001 | < 0.03 |
| Miscellaneous [c] | < 0.001 | < 0.03 |
| Subtotal — Manmade | 0.064 | 18 |
| **Total Natural and Manmade** | **0.358** | **100** |

Source: NCRP 1987

(a) Effective dose equivalent is proportional to incremental risk in cancer

(b) Dose equivalent to bronchi from radon decay products. The assumed weighting factor for the effective dose equivalent relative to whole-body exposure is 0.08.

(c) U.S. Department of Energy facilities, smelters, transportation, etc.

About 9,000 Ci of Pu-238 was released to the atmosphere from weapons tests. The 1964 reentry and burn-up of a Systems for Nuclear Auxiliary Power (SNAP)-9A radioisotope thermoelectric generator (RTG) released 17,000 Ci of Pu-238 into the atmosphere. This release was consistent with the RTG design philosophy of the time. Since 1964, essentially all of the Pu-238 released from SNAP-9A has been deposited on the Earth's surface (AEC 1974). About 25 percent (approximately 4,000 Ci) of that 1964 release was deposited in the northern hemisphere, with the remaining 75 percent settling in the southern hemisphere. In April 1986, approximately 369,000,000 Ci of various radioisotopes were released to the environment from the Chernobyl nuclear power station accident (IAEA 2005a). Approximately 400 Ci of the total Chernobyl release was Pu-238.

The total plutonium released to the ocean environment by overseas nuclear reprocessing plants between 1952 and 1992 was more than 100,000 Ci (Gray *et al*. 1995), of which approximately 3,400 Ci was Pu-238 (Gray *et al*. 1995; IAEA 2005b; OSPAR 2005), bringing the total amount of Pu-238 dispersed into the environment to about 30,000 Ci.

# 4 ENVIRONMENTAL CONSEQUENCES

This Chapter of the Draft Environmental Impact Statement (DEIS) for the Mars Science Laboratory (MSL) mission presents information on the potential environmental impacts of launching the proposed mission. The evaluations presented in this DEIS, based on representative configurations of Atlas V and Delta IV launch vehicles, were completed prior to NASA's selection of the Atlas V 541 as the launch vehicle for the MSL mission. NASA considers these evaluations to adequately bound the potential environmental consequences of the alternatives described in this DEIS. NASA will continue its analysis of the alternatives and may update the evaluations with information specific to the Atlas V 541 launch vehicle in the Final EIS.

The MSL DEIS is a Tier 2 document under the *Final Programmatic Environmental Impact Statement for the Mars Exploration Program* (MEP PEIS) (NASA 2005a). The MEP PEIS examined two areas for potential environmental consequences: (1) the local area surrounding Cape Canaveral Air Force Station (CCAFS), Florida, and (2) the global environment. The potential environmental consequences of launching the MSL mission would be similar to those that are reported for the Proposed Action in the MEP PEIS. Therefore, this chapter of the MSL DEIS addresses in detail only those areas that are considered to have had new or updated information from that reported in the MEP PEIS.

## 4.1 ENVIRONMENTAL IMPACTS OF THE PROPOSED ACTION (ALTERNATIVE 1)

The National Aeronautics and Space Administration (NASA) proposes to continue preparations for and to implement the MSL mission. The proposed MSL mission would include an autonomous rover that would perform science operations on the surface of Mars. One Multi-Mission Radioisotope Thermoelectric Generator (MMRTG) would provide the necessary electric power to operate the MSL rover and its science instruments.

The MSL spacecraft would be launched on either an Atlas V or a Delta IV launch vehicle (see Section 2.1.5) from Space Launch Complex-41 (SLC-41) or SLC-37, respectively, at CCAFS. The launch opportunity would occur during September – November 2009 with arrival dates of the spacecraft at Mars ranging from mid-July 2010 to mid-October 2010.

This section of the DEIS first presents the environmental impacts of preparing for launch and the environmental impacts resulting from a normal launch event (Sections 4.1.1 and 4.1.2, respectively). These impacts were addressed in the MEP PEIS (NASA 2005a). The MEP PEIS used the following documents as principal sources in evaluating potential environmental impacts associated with Atlas and Delta launches from CCAFS: the U.S. Air Force's (USAF) *Final Environmental Impact Statement for the Evolved Expendable Launch Vehicle Program* (USAF 1998); the USAF's *Final Supplemental Environmental Impact Statement for the Evolved Expendable Launch Vehicle Program* (USAF 2000); and NASA's *Final Environmental Assessment for Launch of NASA Routine Payloads on Expendable Launch Vehicles from Cape Canaveral Air Force Station, Florida and Vandenberg Air Force Base, California* (NASA 2002). The USAF

has assessed environmental impacts of Atlas V and Delta IV launches through 2020 based upon an annual average launch rate of 10 launches and 11 launches, respectively, from CCAFS (USAF 2000). Launch of either an Atlas V or a Delta IV for the MSL mission would be included in and not increase this previously approved launch rate.

The potential nonradiological environmental impacts of a launch accident are discussed in Section 4.1.3. Section 4.1.4 addresses radiological impacts which may result from a launch accident.

Figure 4-1 presents summaries of launch-related probabilities for the proposed MSL mission. These probability summaries were derived by combining the estimated failure probabilities from *Mars Science Laboratory Launch Accident Probability Data For EIS Risk Assessment* (ASCA 2006) and *Delta IV Heavy AIC/AOC Probability Data for Application to MSL DEIS Risk Assessment* (NASA 2006), and from estimated release probabilities in DOE's *Nuclear Risk Assessment for the Mars Science Laboratory Mission Environmental Impact Statement* (DOE 2006a). As such, the estimated probabilities summarized in Figure 4-1 do not reflect the reliability of any single launch vehicle.

The most likely outcome of implementing the proposed MSL mission (917 out of 1,000) is a successful launch of the spacecraft toward Mars. If, however, a launch accident were to occur, it is not expected to result in a release of the plutonium dioxide ($PuO_2$) in the MMRTG.

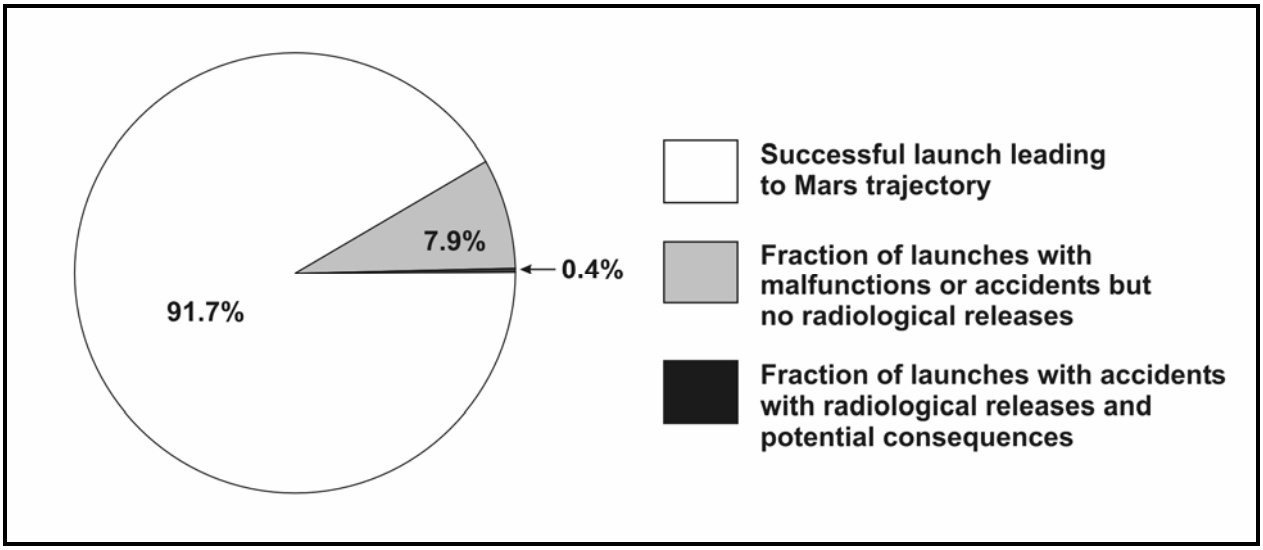


Source: Adapted from ASCA 2006, NASA 2006, and DOE 2006a

**FIGURE 4-1. ESTIMATED LAUNCH-RELATED PROBABILITIES**

A launch success probability of approximately 92 percent is estimated for a launch vehicle to successfully complete all pre-launch operations, first stage flight, second stage flight, and conclude with successful insertion of the spacecraft into the proper Earth escape trajectory toward Mars. The methodology used to calculate this estimate utilized flight histories of comparable United States and Russian launch vehicles flown

since 1988. This flight history consists of earlier versions of Atlas and Titan launch vehicles manufactured by the Lockheed Martin Corporation, Delta launch vehicles manufactured by The Boeing Company, and Zenit and Energia launch vehicles manufactured by Russian aerospace companies. This is done to provide some assurance to the estimate that all past applicable and partially applicable flight failure experiences are considered in the reliability estimate of the launch vehicle for the MSL mission. This estimate therefore does not necessarily reflect the demonstrated reliability of the Atlas V 541 launch vehicle, which in fact should be higher. This analytical approach for the overall mission launch reliability is considered by NASA to be generally representative of the available launch vehicles for this mission, and is based upon the most recent best available information at the time of the analysis. NASA continues to evaluate the mission launch reliability analysis and may update the Final EIS with information specific to the Atlas V 541 launch vehicle. Should the results of NASA's continuing evaluations differ significantly from the information presented in this EIS, NASA would consider the new information, and determine the need, if any, for additional environmental documentation.

### 4.1.1 Environmental Consequences of Preparing for Launch

Launch activities for the MSL mission would be subject to Federal, State, and local environmental laws and regulations, and USAF and NASA regulations and requirements (see Section 4.9). Atlas and Delta launch vehicles are routinely launched from CCAFS and processing the launch vehicle for the MSL mission would be considered a routine activity.

Payload and launch vehicle processing at Kennedy Space Center (KSC) and CCAFS would involve a number of industrial activities that include the use of hazardous materials, and would generate hazardous wastes, other solid and liquid wastes, and air emissions. Such material would include but not be limited to propellants, oils, solvents, primers, sealants, and process chemicals. NASA or its contractors would acquire hazardous materials and would dispose generated hazardous wastes. In addition, CCAFS and NASA have programs for pollution prevention and spill prevention. Airborne emissions from liquid propellant loading and off-loading of spacecraft and launch vehicles are closely monitored using vapor detectors. Systems for loading hypergolic fuels (fuels which ignite spontaneously when mixed with an oxidizer) use air emission controls (USAF 1998). Thus, processing the spacecraft and the launch vehicle for the MSL mission is not expected to cause substantial adverse environmental impacts.

Some spacecraft and launch vehicle integration personnel could be exposed to radiation during pre-launch testing and integration of the MMRTG to the MSL spacecraft. Integration and launch processing activities involving ionizing and non-ionizing radiation at KSC and CCAFS are subject to extensive review and authorization of all activities by the local radiation protection authority prior to initiation of any operation. Such operations are actively monitored by launch site radiation safety personnel to ensure adherence to approved operating and emergency procedures and to maintain operational personnel exposures at levels that are as low as reasonably achievable (USAF 1999, NASA 2001).

### 4.1.2 Environmental Impacts of a Normal Launch

The primary environmental impacts of a normal launch of the MSL mission on an expendable launch vehicle would be associated with airborne exhaust emissions from propellant combustion, particularly from the solid propellant in the solid rocket boosters (SRB), if used. Exhaust from the liquid propellant first stage of the launch vehicle (a combination of liquid oxygen ($LO_2$) and either rocket propellant-1 (RP-1) or liquid hydrogen ($LH_2$) depending on the selected launch vehicle) would have relatively minor impacts.

#### 4.1.2.1 Land Use

Processing and launch of the MSL mission on either an Atlas V or a Delta IV would be consistent with the designated land uses of CCAFS and KSC (USAF 2001; NASA 2003; NASA 2005a).

#### 4.1.2.2 Air Quality

Rocket launches are discrete events that can cause short-term impacts on local air quality from launch vehicle exhaust emissions. Winds would rapidly disperse and dilute the launch emissions to background concentrations. After ignition of the first stage and the first few seconds of liftoff through launch vehicle ascent, the exhaust emissions would form a buoyant cloud at the launch pad. This high-temperature cloud would rise quickly and stabilize at an altitude of several hundred meters near the launch area. The cloud would then dissipate through mixing with the atmosphere. The exhaust products would be distributed along the launch vehicle's trajectory as the vehicle moves through the atmosphere. Airborne emissions from a normal launch of the MSL mission at CCAFS would not be expected to result in adverse impacts to the public (USAF 1998, USAF 2000, NASA 2005a). The nearest residential areas to either SLC-37 or SLC-41 at CCAFS are about 10 to 16 kilometers (km) (6 to 10 miles (mi)) to the south in the cities of Cape Canaveral and Cocoa Beach.

First stage liquid propellant engines that use rocket propellant-1 (RP-1) and liquid oxygen ($LO_2$), such as the Atlas V, would primarily produce carbon monoxide (CO), carbon dioxide ($CO_2$), and water vapor as combustion products. First stage liquid propellant engines that use liquid hydrogen ($LH_2$) and $LO_2$, such as the Delta IV, would produce water vapor. Solid propellant, consisting of ammonium perchlorate, aluminum powder, and hydroxyl-terminated polybutadiene (HTPB) binder in the SRBs of the Atlas V, would primarily produce aluminum oxide ($Al_2O_3$) particulates, CO, hydrogen chloride (HCl), and nitrogen ($N_2$). Under the high temperatures of the SRB's exhaust the CO would be quickly oxidized to $CO_2$, and the $N_2$ may react with ambient oxygen to form nitrogen oxides ($NO_X$). Most of these emissions would be removed from the atmosphere over a period of less than one week, yielding no long-term accumulation of these products (USAF 1998).

Previous analyses have shown that emissions from a normal launch of an Atlas V with SRBs would not create long-term adverse impacts to air quality in the region (USAF 2000). The entire State of Florida is in attainment for all National Ambient Air Quality Standards (NAAQS) constituents (see Table 3-1). Emissions from launch of the

MSL mission on either an Atlas V or a Delta IV vehicle at CCAFS would not be sufficient to jeopardize the attainment status of the region (NASA 2005a).

#### 4.1.2.3 Noise

Noise impacts associated with launches occur due to sound from the launch pad from ignition through lift-off. Increased noise levels would occur for only a short period (typically less than two minutes) during the vehicle's early ascent, and diminish rapidly as the vehicle gains altitude and moves downrange (USAF 1998).

Non-essential workers would be removed from the launch area prior to the MSL liftoff, and those remaining would be exposed to noise levels anticipated to be below Occupational Safety and Health Administration regulations for unprotected workers (140 A-weighted decibels (dBA) maximum and 115 dBA over a 15-minute average). The sound pressure level, measured at ground level 107 meters (m) (350 feet (ft)) from the launch pad, during the January 2006 launch of the New Horizons mission on an Atlas V 551 peaked at approximately 144 decibels (dB) at 40 hertz but was about 132 dB at 1,200 hertz[1] during liftoff. While some area residents may be momentarily annoyed by noise during the MSL launch, such noise would be transient and would not be expected to exceed the EPA maximum 24-hour average exposure level of 70 dBA for the general public and would therefore present no health hazard (NASA 2005a).

Sonic booms would be generated by normal launch of the MSL mission, but would occur offshore over the Atlantic Ocean. No adverse impact to human populations would be expected. Ships and other vessels in the area would be warned in advance of the launch event and would not be adversely affected (USAF 1998).

#### 4.1.2.4 Geology and Soils

If the Atlas V with SRBs is selected by NASA, the MSL launch would result in deposition of solid rocket exhaust products, consisting primarily of $Al_2O_3$ particulates and HCl, onto soils. The soils at CCAFS are well buffered, however, and are not expected to be adversely affected. No long-term adverse impacts to geology or soils at CCAFS would be expected from the MSL launch (USAF 1998, NASA 2005a).

#### 4.1.2.5 Hydrology and Water Quality

Large quantities of water are used during launch of both an Atlas V and a Delta IV for cooling, acoustic damping, post-launch wash-down, fire suppression, and potable uses. The City of Cocoa, which pumps water from the Floridan Aquifer, is contracted to supply water to CCAFS and Patrick Air Force Base and has sufficient capacity to supply sources to meet usage demands for launch of the MSL mission. Water used at the launch complex during launch would be collected and treated, if necessary, prior to being released to grade in accordance with a Florida Department of Environmental Protection wastewater discharge permit, or released to the wastewater treatment plant.

[1] Human hearing is most sensitive to sound in frequencies ranging from 1,000 to 4,000 hertz.

Depending on meteorological conditions, the launch exhaust cloud could drift over and settle onto the Atlantic Ocean or the Banana River. Solid propellant exhaust products would temporarily acidify local waters, but would rapidly be dispersed and buffered. No long-term adverse impacts to hydrology or surface water quality would be expected from a normal launch of the MSL mission (NASA 2005a).

#### 4.1.2.6 Offshore Environment

The offshore environments at CCAFS would be impacted by the jettisoned launch vehicle sections in pre-approved drop zones (see Section 4.1.2.11). Any small amounts of residual propellants would be released to the surrounding water. Metal parts would eventually corrode, but toxic concentrations of the metals would be unlikely because of the slow rate of the corrosion process and the large volume of ocean water available for dilution (USAF 1998, NASA 2005a).

#### 4.1.2.7 Biological Resources

Biological resources are not expected to be adversely affected by the MSL launch except for those fauna and flora in the immediate vicinity of the launch complex. Impacts to vegetation from other launch vehicles have been observed up to about 800 meters (2,625 feet) from the launch pads. Acidic deposition from solid propellant exhaust products and high temperatures from the exhaust cloud could damage or kill biota within the immediate vicinity of the launch pad, however, long-term population effects on terrestrial biota would not be expected. Jettisoned launch vehicle sections that land in the ocean would be subject to corrosion and release of residual propellant. However, it is unlikely that these vehicle sections would have an adverse impact on marine species (USAF 1996, NASA 2005a).

Short-term impacts to terrestrial fauna and flora in the immediate vicinity of the launch complex could be expected due to the MSL launch. Aquatic biota in nearby water bodies, such as the Banana River and the near-shore areas of the Atlantic Ocean, should not be adversely affected by acidic deposition from the exhaust cloud of the Atlas V SRBs (USAF 1996). During the launch, wildlife in the vicinity of the launch site would be temporarily disturbed due to noise, generally amounting to a startle effect. Because launches are infrequent events, no long-term impacts would be anticipated on wildlife and marine species from noise from the MSL launch (NASA 2005a).

No adverse impacts on threatened or endangered species would be expected. Launch of the MSL mission would not interfere with CCAFS management of Florida scrub-jay habitat. CCAFS has a light management plan that addresses mitigation of impacts to nesting sea turtles during nighttime launches and would be implemented should the MSL launch occur at night (USAF 2001).

#### 4.1.2.8 Socioeconomics

Launch of the proposed MSL mission from CCAFS would be part of the normal complement of launches at CCAFS. Thus, a single launch would result in negligible impacts to socioeconomic factors such as demography, employment, transportation, and public or emergency services.

#### 4.1.2.9 Environmental Justice

Launch of the proposed MSL mission would not be anticipated to result in disproportionately high and adverse impacts to low income or minority populations. Further details are presented in Appendix C.

#### 4.1.2.10 Cultural/Historic/Archaeological Resources

No cultural or archaeological resources would be impacted, nor are there buildings or sites that are listed or eligible for listing in the National Register of Historic Places, at either SLC-37 or SLC-41 (NASA 2005a).

#### 4.1.2.11 Health and Safety

At CCAFS, procedures would be in place for the MSL mission launch operations, and would include considerations for a normal launch, launch-related accidents, fire protection, alarm, fire suppression, flight termination, and explosive safety (USAF 1998, USAF 2000). Using procedures established for existing launch systems, risks to installation personnel and the general public would be minimized to acceptable levels during both a normal and aborted launch in accordance with the USAF's *Range Safety User Requirements Manual* (USAF 2004).

The most substantial potential health hazard during a normal MSL launch would be exposure to HCl emitted from the Atlas V SRBs. Regardless of the selected launch vehicle, Range Safety at CCAFS would use models to predict launch hazards to the public and to launch site personnel prior to the launch. These models calculate the risk of injury resulting from toxic exhaust gases from normal launches, and from potentially toxic concentrations due to a failed launch. The launch would be postponed if the predicted collective public risk of injury from exposure to toxic exhaust gases exceeds acceptable limits (USAF 2004). This approach takes into account the exhaust plume's concentration, direction, and dwell time, and emergency preparedness procedures (USAF 2000).

CCAFS Range Safety would monitor launch surveillance areas to ensure that risks to people, aircraft, and surface vessels are within acceptable limits. For the MSL mission, a launch trajectory would be created and modified to ensure safety on the ground and at sea, and control areas and airspace would be closed to the public as required. The underlying areas at risk from falling debris or jettisoned stages would be cleared until all launch operations are completed. The SRB casings of the Atlas V would land closest to shore, in pre-approved drop zones centered at distances of approximately 230 km (143 mi) from shore. The strap-on common booster cores (CBC) of the Delta IV would land in pre-approved drop zones further from shore. Finally, the PLF sections and the first stage would land much further from shore, also in pre-approved drop zones (USAF 2000). These distances would be highly dependent on the specific MSL launch vehicle, its launch trajectory characteristics, and other factors such as wind effects.

The USAF would disseminate a Notice to Aviators through the Federal Aviation Administration (FAA), and air traffic in a FAA-designated area around the launch corridor would be controlled. Radar surveillance for intruding aircraft within a 93 km

(50 nautical miles) radius of the launch site would be conducted beginning 30 minutes prior to the scheduled launch and continue until the launch is complete. The USAF also would ensure that a Notice to Mariners within a predetermined impact debris corridor is disseminated beginning 10 working days prior to launch. The U.S. Coast Guard would transmit marine radio broadcast warnings to inform vessels of the effective closure time for the sea impact debris corridor. Warning signs would be posted in various Port Canaveral areas for vessels leaving port (USAF 1998). In addition, Patrick Air Force Base would maintain a web site and toll-free telephone number with launch hazard area information for mariners and restricted airspace information for pilots.

#### 4.1.2.12 Global Environment

Launch of the proposed MSL mission on either the Atlas V or the Delta IV would not be expected to make substantial contributions to the amounts of ozone-depleting chemicals or greenhouse gases in the atmosphere. Some ozone depletion would occur along the trajectory of the launch vehicle, but the depletion trail would be largely temporary and self-healing within a few hours of the vehicle's passage. Greenhouse gases, principally $CO_2$ (from the Atlas V) and water vapor, would be emitted during launch, but the amount would be negligible, on the order of one-millionth ($10^{-6}$) percent compared to the net greenhouse gases emitted by the United States in 2004 of approximately $6.3 \times 10^{12}$ kilograms (kg) ($1.4 \times 10^{13}$ pounds (lb)) measured as carbon dioxide equivalent (EPA 2006f). The amount of greenhouse gases emitted by the launch vehicle for the MSL mission would therefore not be anticipated to substantially contribute to global climate change (NASA 2005a).

#### 4.1.2.13 Orbital and Reentry Debris

During the launch sequence of either the Atlas V or the Delta IV for the MSL mission (see Figures 2-12 and 2-14 respectively), the SRB casings of the Atlas V or the strap-on CBCs of the Delta IV, the first stage, and the PLF would be jettisoned in succession and fall into the Atlantic Ocean in predetermined drop zones (see Section 4.1.2.11) well before reaching Earth orbit. Shortly after separating from the first stage, the second stage engine would be ignited, accelerating the second stage and the attached spacecraft to low Earth orbit. After a brief coast period, the second stage engine would be reignited, accelerating to Earth escape velocity. After propellant depletion, the second stage would be separated from the MSL spacecraft, and the second stage would continue separately into interplanetary space. Therefore, a normal launch of the MSL mission would not contribute to orbital or reentry debris.

### 4.1.3 Environmental Impacts of Potential Accidents Not Involving Radioactive Material

As shown in Figure 4-1, a malfunction or accident occurring during launch that leads to loss of the MSL mission is estimated to occur with a probability of about 83 times out of 1,000. If an accident were to occur, then the highest conditional probability

(approximately 79 out of 83) is that such an accident would not involve release of $PuO_2$ from the MMRTG[2].

The potential environmental impacts associated with expendable vehicle launch accidents have been discussed in previous USAF environmental documentation (USAF 1998, USAF 2000), summarized here and augmented with new information where applicable. A variety of accidents could occur during preparations for launch and during launch. Only two types of nonradiological accidents would have potential environmental consequences: a liquid propellant spill occurring after the start of propellant loading operations, and a launch failure. The potential consequences of these accidents are presented below.

#### 4.1.3.1 Liquid Propellant Spills

A typical Atlas V uses about 284,089 kilograms (kg) (626,309 pounds (lb)) of RP-1 and $LO_2$ for the first stage, and about 20,672 kg (45,573 lb) of $LH_2$ and $LO_2$, with less than 91 kg (200 lb) of hydrazine for the Centaur second stage (USAF 2000, ILS 2001). A typical Delta IV Heavy uses about 606,300 kg (1,336,650 lb) of $LH_2$ and $LO_2$ for the first stage, about 27,200 kg (60,000 lb) of $LH_2$ and $LO_2$ for the second stage, with about 154 kg (340 lb) of hydrazine for the second stage (Boeing 2002, Freeman 2006). The MSL spacecraft would use about 330 kg (728 lb) of hydrazine. The first stage and second stage fueling operations for both vehicles are performed in accordance with CCAFS propellant loading protocols. Standard procedures such as use of closed loop systems are practiced, which would minimize worker exposure and the potential for fuel releases.

Accidental leaks or spills of RP-1, $LO_2$, $LH_2$, and hydrazine could occur during propellant loading and unloading activities. USAF safety requirements specify that plans and procedures be in place to protect the workforce and the public during fueling operations (USAF 2004). Spill containment would be in place prior to any propellant transfer to capture any potential release. Hydrazine transfer would involve a relatively small amount of liquid through a relatively small transfer system, so any leakage would be held to an absolute minimum. The atmospheric dispersion of hydrazine from a liquid propellant spill has not been modeled, but it is expected that, because of the limited quantities involved, there would be no impact to the public.

Spill kits located in the work area would be used if a release is detected during RP-1 loading. Personnel would be present in the immediate area to handle any release. Workers would be required to wear personal protective equipment while loading RP-1 and hydrazine, and all unprotected workers would be removed from the area prior to loading. The operator would remotely close applicable valves to minimize any release and safe the system.

---

[2] The small quantities of radioactive materials in the Alpha Particle X-Ray Spectrometer (APXS) and Dynamic Albedo of Neutrons (DAN) science instruments on the rover would be negligible compared to that contained in the MMRTG planned for use in the Proposed Action (Alternative 1). In a launch accident, their use would result in contributions to mission risks and related radiological consequences of nominally less than 0.01 percent of those associated with the MMRTG under the Proposed Action (Alternative 1) described in Section 4.1.4 (DOE 2006b).

If a spill or release is detected during $LO_2$ and $LH_2$ loading at the launch pad, the operator would remotely close the applicable valves to minimize the amount of liquid released, and safe the system. Water deluge would be used if heat is detected in the area of concern. Deluge water would be collected and treated, if necessary, prior to being released to grade in accordance with a Florida Department of Environmental Protection wastewater discharge permit, or released to the wastewater treatment plant.

#### 4.1.3.2 Launch Failures

A launch vehicle accident either on or near the launch pad within a few seconds of lift-off presents the greatest potential for impact to human health, principally to workers. For the proposed MSL mission, the primary potential health hazard during a launch accident would be from the HCl emitted from burning solid propellant from the SRBs, should the Atlas V be selected. Range Safety at CCAFS uses models to predict launch hazards to the public and to personnel prior to every launch. These models calculate the risk of injury resulting from toxic gases, debris, and blast overpressure from potential launch failures. Launches are postponed if the predicted collective public risk of injury exceeds acceptable limits, which are applied separately for the risk of injury from exposure to toxic gases, debris, and blast overpressure (USAF 2004). This approach takes into account the probability of a catastrophic failure, the resultant plume's toxic concentration, direction, and dwell time, and emergency preparedness procedures (USAF 2000).

Range Safety requirements mandate destruct systems on liquid propellant tanks and SRBs (see Section 2.1.5.3). In the event of destruct system activation, the propellant tanks and SRB casings would be ruptured, and the entire launch vehicle would be destroyed. A catastrophic launch failure would involve burning solid propellant, should the Atlas V be selected, and the ignition of liquid propellant. The potential short-term effects of an accident would include a localized fireball, falling debris from explosion of the vehicle, release of unburned propellants and propellant combustion products, and for on-pad or very low altitude explosions, death or damage to nearby biota and brush fires near the launch pad. Unburned pieces of solid propellant with high concentrations of ammonium perchlorate could fall on land or into nearby bodies of water. Perchlorate could leach into surrounding soil or water resulting in high concentrations in the immediate vicinity of the propellant fragment, and could result in adverse, localized impacts to the terrestrial or aquatic environment. Some mortality to biota in those areas could be expected until the solid propellant is fully dissolved. However, pieces of unburned solid propellant falling on land would be collected and disposed as hazardous waste. Similarly, large pieces falling in fresh water areas would be collected and disposed, minimizing the potential for perchlorate contamination.

The USAF modeled postulated accidents at CCAFS involving combustion of typical launch vehicle propellants (USAF 2000). Representative meteorological conditions were used in the analyses to model movement of the exhaust cloud. Release and combustion of both liquid and solid propellants were assumed to be involved. For the modeled accidents, the principal constituents resulting from burning propellant were CO, $Al_2O_3$ particulates, and HCl, but also included $H_2$, $H_2O$, and $CO_2$. Although $Al_2O_3$ particulates would be deposited from the explosion cloud as it was carried downwind,

little wet deposition of HCl would be expected unless rain falls through the cloud of combustion products. The estimated concentrations of combustion products resulting from these postulated accidents were found to be well within applicable Federal, State, and USAF standards. Based upon these analyses, emissions resulting from an accident during the MSL mission launch would not be expected to exceed any of the applicable standards, and would not adversely impact air quality in the region.

Parts of the exploded vehicle would fall back to Earth. Except for on-pad or near-pad accidents, most of the fragments would fall into the Atlantic Ocean, where the metal parts would eventually corrode. Toxic concentrations of metals would be unlikely because of slow corrosion rates and the large volume of ocean water available for dilution (USAF 1996).

Debris from launch failures has the potential to adversely affect managed fish species and their habitats in the vicinity of the launch site. Ammonium perchlorate in solid propellant contains chemicals that, in high concentrations, have the potential to result in adverse impacts to the marine environment. The USAF has consulted with the National Marine Fisheries Service on essential fish habitat regarding launches from CCAFS (USAF 2000) of vehicles using SRBs. Launch of the MSL mission from CCAFS would be covered under this consultation.

Residual RP-1 fuel is weakly soluble, would spread over the surface of the water, and should evaporate within a few hours, resulting in only a short-term impact to aquatic biota. Due to the relatively small quantities involved for the MSL mission, hydrazine either would be burned or be dispersed in the atmosphere without entering the ocean.

Beginning two hours before launch, a Brevard County Emergency Management Center representative would be present at a CCAFS launch console with direct audio and video communications links to the Center. The USAF also has a direct emergency phone line to the Florida State Emergency Response Center.

### 4.1.4 Environmental Impacts of Potential Accidents Involving Radioactive Material

As shown in Figure 4-1, a malfunction or accident that would lead to mission failure is not expected (an 83 out of 1,000 chance) to occur during launch of the MSL mission. Most malfunctions (approximately 50 out of 83) would lead to escape from the Earth but the MSL spacecraft would fail to reach Mars. If an accident were to occur, the highest conditional probability outcome (approximately 79 of 83) is that such an accident would not involve release of $PuO_2$ from the MMRTG. There remains, however, a lower conditional probability (approximately 4 out of 83) that an accident would involve release to the environment of some $PuO_2$ from the MMRTG. Therefore, there is an overall probability of approximately 4 out of 1000 (0.4 percent) that the MSL mission would result in an accident with a release of $PuO_2$ to the environment. NASA and the U.S. Department of Energy (DOE) have assessed the potential environmental impacts of launch accidents involving release of $PuO_2$. This section summarizes the results from DOE's nuclear risk assessment (DOE 2006a).

NASA and DOE and its contractors have conducted several safety assessments of launching and operating spacecraft using RTGs (*e.g.*, the Galileo mission in 1989, the

Ulysses mission in 1990, the Cassini mission in 1997, and the New Horizons mission in 2005). In developing the nuclear risk assessment for this DEIS, NASA and DOE have drawn from an extensive experience base that involves:

- testing and analysis of the General Purpose Heat Source Radioisotope Thermoelectric Generator (GPHS-RTG) and its components *(e.g.*, fueled iridium clads and GPHS modules) (see Section 2.1.3) under simulated launch accident environments;
- evaluating the probability of launch-related accidents based on evaluations of system designs and launch histories, including extensive studies of the January 1997 Delta II accident at CCAFS, and of launch vehicle designs; and
- estimating the outcomes of the response of an RTG and its components to the launch accident environments.

DOE's risk assessment for this DEIS (DOE 2006a) was prepared in advance of the more detailed Final Safety Analysis Report (FSAR) that would be prepared if the Proposed Action were selected. That FSAR would be prepared in accordance with DOE Directives and support the formal launch approval process required by Presidential Directive/National Security Council Memorandum 25 (PD/NSC-25), *Scientific or Technological Experiments with Possible Large-Scale Adverse Environmental Effects and Launch of Nuclear Systems into Space*. If the Proposed Action (Alternative 1) is selected, the FSAR for the MSL mission would be developed in a manner similar to those for past missions.

The information and results presented in the DOE risk assessment and summarized in this DEIS were developed based on consideration of risk assessments performed for previous missions which included nuclear materials (*e.g.*, Cassini, the Mars Exploration Rovers (MER), and New Horizons), with additional supplemental analyses where considered appropriate. The resulting approach for DOE's risk assessment consists of a combination of MSL mission-specific analyses coupled with scaling selected results for past missions on a per-curie inventory basis for specific launch accidents and accident environments.

#### 4.1.4.1 Risk Assessment Methodology

The nuclear risk assessment for the MSL mission considers (1) potential accidents associated with the launch and their probabilities and resulting environments; (2) the response of the MMRTG to such accident environments in terms of varying amounts of radioactive material that become airborne (source terms) and the release probabilities; and (3) the radiological consequences and risks associated with such a release. The risk assessment was based on an MMRTG typical radioactive material inventory of 58,700 curies (Ci) of plutonium (Pu) 238 (an alpha-emitter with a half life of 87.7 years) in the form of plutonium dioxide ($PuO_2$). The activity includes minor contributions from other related plutonium and actinide radionuclides (see Table 2-3).

A composite approach has been taken in reporting the results in DOE's risk assessment for this DEIS for accident probabilities, potential releases of $PuO_2$ in case of an accident

(with that portion of the release becoming airborne called source terms), radiological consequences, and mission risks. In the composite approach, the results for the representative Atlas V 541 and Delta IV Heavy launch vehicles were combined in a probability-weighted manner. DOE's risk assessment was developed during the time when the candidate launch vehicles being considered by NASA for the MSL mission were the Atlas V 541 and the Delta IV Heavy. Differences in the two launch vehicles in terms of design, accident probabilities and accident environments have been taken into account in developing composite results.

The basic steps in the risk assessment methodology are presented in Figure 4-2. The nuclear risk assessment for the MSL mission DEIS began with the identification of initial launch vehicle system failures and the subsequent chain of accident events that could ultimately lead to the accident environments which could threaten the MMRTG. These launch vehicle system failures were based on Atlas V 541 and Delta IV Heavy system reliabilities and estimated failure probabilities (ASCA 2006, NASA 2006).

Some intermediate accident events (such as fragments from a propellant tank explosion) and final accident configurations (such as the MMRTG impacting the ground near burning solid propellant) have the potential to create accident environments that could damage the MMRTG and result in the release of $PuO_2$. Based on analyses performed for earlier missions that carried radioisotope devices[3], DOE identified the specific accident environments that could potentially threaten the MMRTG. Five categories of environments were identified for consideration for the MSL mission DEIS:

(1) mechanical impact;

(2) thermal energy;

(3) fragment impacts;

(4) explosion overpressure; and

(5) reentry conditions (*i.e.*, aerodynamic loads and aerodynamic heating).

The first three of these accident environments, either alone or in combination with the others, were identified as posing the greatest threat to the MMRTG. The specific environments of greatest concern are (1) ground impact of various intact configurations, and (2) fire environments resulting from burning solid propellant.

[3] RTGs and radioisotope heater units (which contain about 2.7 grams (0.1 ounce) of $PuO_2$, and generate 1 watt of heat for passive thermal control). Radioisotope heater units are not planned for the Proposed Action (Alternative 1).

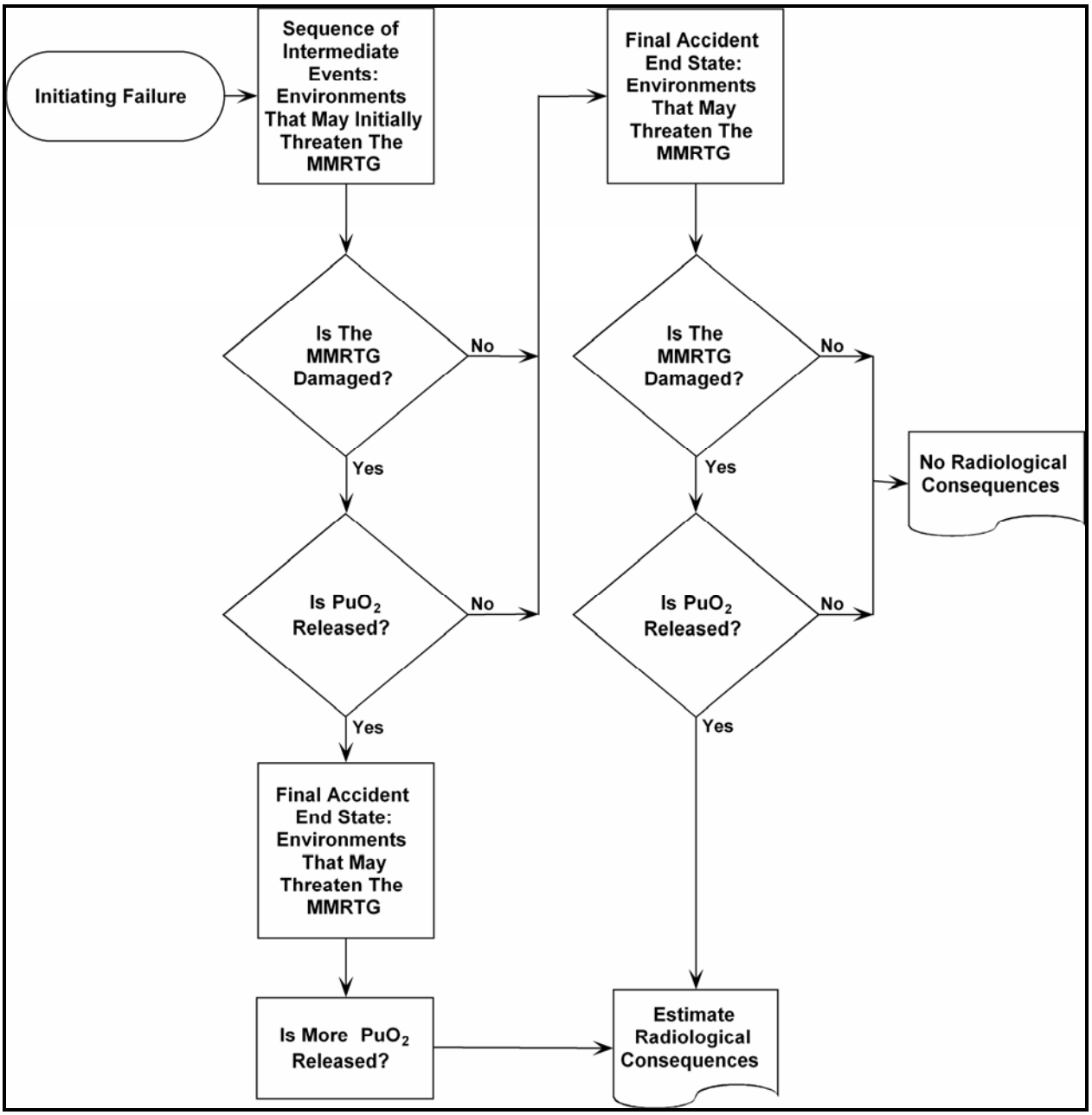


**FIGURE 4-2. THE RADIOLOGICAL RISK ASSESSMENT METHODOLOGY**

DOE determined the response of the MMRTG and GPHS modules to these accident environments and estimated the amount of radioactive material that could potentially be released. Results of DOE's testing and analyses program for previous configurations of RTGs were used to determine if a release of radioactive material from the MMRTG could potentially occur. The release fractions (the fraction of the $PuO_2$ that would be released to the environment) were determined by considering three primary accident environments: mechanical impact, burning solid propellant, and fragments. The source term (that portion of $PuO_2$ released from the MMRTG that becomes airborne and can be transported downwind) results for MMRTG component mechanical impacts were

determined by scaling relevant results based on analyses performed for the Cassini and New Horizons missions. The source terms for mechanical impacts associated with ground impact configurations and solid propellant fires (applicable to the Atlas V 541 only) were based on the methodology used for the MER and New Horizons missions, with specific adjustments made to account for the amount and the geometry of solid propellant specific to the Atlas V 541 and the influence of solid propellant fire environments on $PuO_2$ particle size distributions.

Consequences of postulated releases were estimated by scaling of selected results from previous missions and additional analyses to reflect conditions specific to the Atlas V 541, the Delta IV Heavy, and the MSL mission, including: population growth, plume configuration, launch complex location, historical meteorology during the September – November launch period, different particle size distributions, and solid propellant amount and geometry. Consequence values for population dose, maximum exposed individual dose, population health effects[4], and land contamination were estimated at both mean and 99th percentile values.

The MSL mission was divided into five phases. Risk estimates were generated for each mission phase by combining the probabilities and consequences for each relevant accident. The risk estimates for all mission phases were then combined to produce a mission risk estimate.

#### 4.1.4.2 Launch Accidents and Accident Probabilities

For the purpose of this risk assessment, the MSL mission was divided into five mission phases on the basis of mission elapsed time (MET, the time (T) in seconds (s) relative to launch) reflecting principal launch events. In the following definitions, $T_1$ denotes the time (typically a few seconds) prior to liftoff (T=0) when the launch vehicle's first stage main engine is ignited[5], and $T_x$ denotes the time when the vehicle clears land; both events would occur at different times for the Atlas V and Delta IV vehicles.

- Phase 0—Pre-Launch: $T < T_1$, prior to ignition of the first stage main engine;
- Phase 1—Early Launch: $T_1 < T_x$, after which most debris and intact vehicle configurations resulting from an accident would impact water;
- Phase 2—Late Launch: $T_x < T <$ MET when the launch vehicle reaches an altitude of about 30 km (100,000 ft), an altitude above which reentry heating could occur;
- Phase 3—Pre-Orbit/Orbit: from an altitude of about 30 km (100,000 ft) to the first engine thrust cutoff of the second stage and the Command Destruct System (CDS) is disabled; and,

[4] Additional latent cancer fatalities due to a radioactive release (*i.e.*, the number of cancer fatalities resulting from this release that are in addition to those cancer fatalities which the general population would normally experience from other causes).
[5] The main engine undergoes an automatic health check beginning at $T_1$. Should a malfunction be detected before T=0, the engine would be shut down and the launch would be aborted.

- Phase 4—Orbit/Escape: from the second engine thrust cutoff of the second stage and spacecraft separation, when Earth escape velocity is achieved.

Accidents and their associated probabilities were developed in terms of initiating failures, defined as the first system-level indication of an anomaly that could lead to a launch abort (*i.e.*, safe hold or termination of the launch countdown), catastrophic accident, or mission failure. An example of an initiating failure would be a trajectory control malfunction resulting in the launch vehicle deviating from its planned trajectory. An initiating failure is the beginning of a sequence of intermediate events that can lead to a range of possible end states, including accident configurations involving the MMRTG and various launch vehicle stages[6] and the MSL spacecraft. For example, activation of the Flight Termination System (FTS) following a trajectory control malfunction could lead to the MMRTG impacting the ground. Associated with the accident configuration end states are the environments that could damage the MMRTG and result in the release of $PuO_2$.

Pre-Launch (T < 0 s) initiating failures include tank failures and inadvertent FTS activation. Pre-Launch initiating failures generally involve conditions that can be mitigated by existing systems or procedures, leading to mission abort rather than accidents that threaten the MMRTG.

The Launch and Post Launch (T ≥ 0) initiating failures include:

- Ground Support Equipment failure during liftoff;
- Trajectory and attitude control malfunctions;
- Propellant tank failures;
- Catastrophic main engine failures affecting either the Stage 1 and 2 engines
- SRB case failure (in the Atlas V 541);
- Structural failure;
- Inadvertent FTS activation or payload fairing (PLF) separation; and,
- Staging failure.

The post launch (Phase 1 and 2) end states that can result from the initiating failures are determined to a large degree by the FTS actions (see Section 2.1.5.3) that occur or do not occur during the accident progression following the initiating failure. Important FTS considerations affecting the end states are as follows.

- <u>Automatic Destruct System</u> (ADS). The ADS destroys the Stages 1 and 2 liquid propellant tanks and the SRBs (on the Atlas V 541). The ADS is safed (automatically deactivated) prior to Stage 1 / 2 separation.

[6] For brevity in the following discussion, the first and second stages of the MSL launch vehicle, and the MSL spacecraft, are sometimes referred to as Stages 1 and 2, and SC respectively.

- CDS: The CDS is activated by the Mission Flight Control Officer (MFCO) and destroys the launch vehicle in the same manner as the ADS. The MFCO would likely issue a CDS in case of a trajectory or attitude control malfunction, where the launch vehicle deviation from the planned trajectory violates specific range safety criteria for continuation of a safe launch. Should the MFCO response time needed for a CDS be insufficient, ground impact of the entire vehicle (termed full-stack intact impact, FSII) could result. The CDS is safed at the end of the first Stage 2 burn.

The initiating failures therefore lead to one or more of the following end states, denoting conditions of first threat to the MMRTG:

- On-Pad Explosion, occurring as a result of accidents occurring during Pre-Launch or very near the pad just prior to actual liftoff, after completion of the Stage 1 engine health check.
- Low and High Altitude FTS. "Low Altitude" denotes conditions where impacts are likely to occur on land, while "High Altitude" denotes conditions leading to impact on the Atlantic Ocean. The response of the spacecraft (SC) to an FTS would depend on the launch vehicle, and the accident environment conditions.
- FSII, in which the entire launch vehicle stack impacts the ground.
- Stage 2/SC, in which Stage 2/SC impacts the ground.
- SC Intact Impact (SCII), in which the intact SC impacts the ground.
- Sub-orbital reentry
- Orbital reentry, referring to reentry after decay from orbit. Other types of reentry are possible (*e.g.*, prompt), but at a much lower probability.

The composite accident end state probabilities for the two representative launch vehicles are presented in Table 4-1.

For this DEIS, the initiating probabilities and total probabilities of an accident with a release of $PuO_2$ are grouped into categories that allow for a descriptive characterization of the likelihood of each accident. The categories and their associated probability ranges are:

- unlikely: $10^{-2}$ to $10^{-4}$ (1 in 100 to 1 in 10 thousand);
- very unlikely: $10^{-4}$ to $10^{-6}$ (1 in 10 thousand to 1 in 1 million); and
- extremely unlikely: less than $10^{-6}$ (less than 1 in 1 million).

Both the very unlikely and extremely unlikely accidents are highly improbable events. Some of these types of launch failures occurred during the early development of launch vehicles in the United States, and changes were made to both vehicle design practices and range safety systems to prevent future occurrences. These accidents, in general, have never occurred in modern U.S. launch history (or mitigating design features have been added to address the root cause of past failures) and require multiple failures of

both launch vehicle and range safety systems that have also never occurred. Probability differences of a factor of a few would not represent statistically significant differences and are well within uncertainty bounds. The discussion of the probabilities by broad frequency categories is more appropriate.

**TABLE 4-1. ACCIDENT END STATE PROBABILITIES**

| Ground Impact Configuration | Phase 0 | Phase 1 | Phase 2 | Phase 3 | Phase 4 | Total Probability |
|---|---|---|---|---|---|---|
| On-Pad Explosion | $7.6 \times 10^{-6}$ | $1.6 \times 10^{-4}$ | - | - | - | $1.7 \times 10^{-4}$ |
| FSII | - | $1.3 \times 10^{-4}$ | - | - | - | $1.3 \times 10^{-4}$ |
| Stage 2/SC | - | $1.4 \times 10^{-5}$ | - | - | - | $1.4 \times 10^{-5}$ |
| SCII | - | $2.6 \times 10^{-6}$ | - | - | - | $2.6 \times 10^{-6}$ |
| Low Altitude FTS | - | $4.1 \times 10^{-3}$ | - | - | - | $4.1 \times 10^{-3}$ |
| High Altitude FTS | - | - | $1.3 \times 10^{-2}$ | - | - | $1.3 \times 10^{-2}$ |
| Sub-Orbital Reentry | - | - | - | $1.1 \times 10^{-2}$ | - | $1.1 \times 10^{-2}$ |
| Orbital Reentry | - | - | - | - | $4.8 \times 10^{-3}$ | $4.8 \times 10^{-3}$ |
| **Total** | **$7.6 \times 10^{-6}$** | **$4.4 \times 10^{-3}$** | **$1.3 \times 10^{-2}$** | **$1.1 \times 10^{-2}$** | **$4.8 \times 10^{-3}$** | **$3.3 \times 10^{-2}$** |

Source: DOE 2006a

Notes:

a. The table presents a composite of the accident end state probabilities for the Atlas V 541and the Delta IV Heavy, determined by taking the probability-weighted value of the two sets of results, treating the conditional probability of having a given launch vehicle as 0.5.

b. The reported values are within a factor of two of the high-end values when the results for each launch vehicles are considered separately.

The potential accident environments associated with potential accidents include blast (explosion overpressure), fragments, thermal energy (burning liquid propellant and/or solid propellant), reentry conditions (aerodynamic loads and heating), and surface impact. A given accident could involve one or more sequential and/or simultaneously occurring accident environments. The nature and severity of such environments would be a function of the type of accident and its MET of occurrence.

Some comments are in order at this point regarding the composite accident probabilities for the two representative launch vehicles. First, there are two representative launch vehicles for MSL: the Atlas V 541 and the Delta IV Heavy. Second, the launch vehicle accident probabilities for the Atlas V 541 and the Delta IV Heavy represent preliminary estimates at this time. Further NASA work on launch vehicle data in support of the Final Safety Analysis Report could result in further revision to these probabilities. For these reasons, DOE's nuclear risk assessment for this DEIS uses a composite average of the two sets of accident probabilities in performing the nuclear risk assessment for the MSL mission, as presented in Table 4-1. This approach reflects the state of knowledge at this early stage in the mission with respect to the launch vehicle to be used on the MSL mission. Preliminary analyses indicate that the differences between the two representative launch vehicles are not expected to be significant, given the uncertainties

in estimates made as part of the overall nuclear risk assessment. At the same time, differences in accident environments for the two representative launch vehicles are taken into account in developing composite source terms for use in the analysis.

#### 4.1.4.3 MMRTG Response to Accident Environments

The nature and severity of the accident environments and the design features of the MMRTG and its components determine the response of the MMRTG and its components to the accident environments. These responses are then characterized in terms of the probability of release and the source terms.

The response of the MMRTG to accident environments is based on consideration of:

- prior safety testing of the GPHS-RTG and its components;
- modeling of the response of the GPHS-RTG and its components to accident environments;
- a comparison of the MMRTG and the GPHS-RTG; and,
- the types of launch vehicle accidents and their environments.

This information allows estimates to be made of the probability of release of $PuO_2$ and the amount of the release for the range of accident scenarios and environments that could potentially occur during the mission. The protection provided by the GPHS module, its graphite components, and the iridium clad encapsulating the $PuO_2$ minimizes the potential for release in accident environments. Potential responses of the MMRTG and its components in accident environments are summarized below.

- Explosion Overpressure and Fragments: Liquid propellant explosions and resulting fragments are not considered to pose any significant threat to the MMRTG or its components. The Stage 2 and PLF configuration, however, is such that in the case of the Delta IV Heavy, the MMRTG is more likely to remain inside an intact SC following a liquid propellant explosion. In the case of the Atlas V 541, the SC is more likely to breakup, resulting in the separation of an intact MMRTG from the Atlas V. Due to the significant protection provided by the MMRTG components located between the MMRTG converter housing and the GPHS modules, no at-altitude fragment releases or damaged GPHS modules are expected.
- Impact: Fracturing of the GPHS module and its graphitic components under mechanical impact conditions provides energy absorbing protection to the iridium clad. Impacts of an intact MMRTG or GPHS modules that occur on steel or concrete near the launch pad could result in small releases of $PuO_2$. Similarly, should Sub-Orbital or Orbital Reentry end states lead to GPHS modules impacting a hard surface (*e.g.*, rock) at terminal velocity following reentry, source terms of similar magnitude could occur. However, an end-on impact of the MMRTG at higher velocities could result in larger releases. Intact configurations such as FSII and Stage 2/SC could result in higher releases for certain

orientations in which launch vehicle and/or SC components (such as the rover) impact directly onto the MMRTG.

- Thermal Energy: Exposure of released $PuO_2$ to the liquid propellant fireball environment would be of short duration (nominally 20 s), although some vaporization of the smaller particulates would occur depending on the timing of the ground impact release and the fireball development. The fireball temperature would decrease in temperature to 2,177 degrees Celsius (°C) (3,951 degrees Fahrenheit (°F)) in less than 1 s, and would continue dropping as the fireball expands. This would be of more significance for a launch accident involving the Delta IV Heavy because of the larger inventory of liquid propellants in the first stage (see Section 2.1.5.2).

  Exposure of released $PuO_2$ fuel to the higher-temperature (ranging up to 2827°C (5,121°F) in the bulk gas with some constituents of the heterogeneous flow at higher temperatures), longer burning (nominally 250 s) solid-propellant from the SRBs of the Atlas V 541 could lead to partial vaporization of the $PuO_2$. In addition, exposure of a bare (or breached) iridium clad could result in clad degradation either through chemical interactions or melting, resulting in partial vaporization of the $PuO_2$. The GPHS module's graphite components could be damaged in accident environments, which would allow direct exposure of the iridium clads to burning solid propellant. In addition, $PuO_2$ vapor releases from intact GPHS modules are possible in certain exposure conditions (*e.g.*, underneath large pieces of burning solid propellant). Under such conditions, temperatures inside the module could be high enough to degrade the iridium clads and vaporize some $PuO_2$, which in turn could permeate through the somewhat porous graphitic materials.

Most launch accidents in Phases 0 and 1 would lead to one of several types of ground impact configurations (*e.g.*, FSII, Stage 2/SC, SC, rover/MMRTG, MMRTG, or free GPHS modules). Ground impacts of the MMRTG or GPHS modules on hard surfaces in the vicinity of the launch pad (*i.e.*, steel or concrete) are likely to lead to small releases, with larger releases occurring with an intact SC or a rover/MMRTG impact. For certain high mechanical threat environments, such as an FSII or Stage 2/SC impact, larger $PuO_2$ releases are possible. Exposure to the liquid propellant fireball could lead to some vaporization of released $PuO_2$ depending on the relative timing of the impact release and the fireball development. Subsequent exposure of MMRTG components and $PuO_2$ to burning solid propellant could result in increased releases through partial vaporization of the $PuO_2$. The probability of exposure to burning solid propellant following an Atlas V 541 launch accident would be higher in Phase 0 than Phase 1 because the SRBs are not pressurized in Phase 0, leading to less near-pad dispersal of burning solid propellant.

No accidents potentially leading to a release are identified In Phase 2, because neither the at-altitude accident environments nor the subsequent water impact are expected to be severe enough to release $PuO_2$.

In both Phases 3 and 4 accidents could lead to sub-orbital and orbital reentry heating and ground impact environments. The GPHS modules are designed to survive reentry,

however, and any subsequent ground impact on hard surfaces (*e.g.*, rock) could result in small releases of $PuO_2$. There is a possibility that the MSL entry vehicle aeroshell might provide some reentry protection such that the SC or portions thereof, including the rover/MMRTG or the MMRTG, could survive reentry.

#### 4.1.4.4 Accident Probabilities and Source Terms

In the nuclear risk assessment, DOE evaluated each of the identified end states and estimated the accident environments to which the MMRTG would likely be exposed. From that information, conditional probabilities that a release would occur and estimated source terms were developed based on the known response of GPHS modules to various accident environments.

As shown in Figure 4-1, the probability of a launch accident involving any release of $PuO_2$ is very small, approximately 4 in 1,000. The most severe accident environments would occur during launch area accidents that might expose the MMRTG to mechanical impacts, explosion overpressures and fragments, and fire environments from burning liquid and solid propellants.

A summary of the accident and source term probabilities by mission phase, along with mean and 99-th percentile source terms, are presented in Table 4-2. For the purpose of this DEIS, "source term" is defined as that portion of the release that becomes airborne and could be transported downwind. When the total quantity released outside of iridium cladding is considered, the airborne source terms reported in Table 4-2 represent about 25 percent of the release, with the remaining 75 percent of the release trapped in debris or slag at the MMRTG impact site. This difference is because some of the released plutonium could be retained inside the graphite components of the GPHS module, and some could be shielded from the fire environments by the graphite components and other debris, including sand. In the event of an accident, these relative amounts would be expected to vary depending on the accident and the release conditions. The 99-th percentile source term is the value predicted to be exceeded with a probability of 0.01 (1 in 100), given a release in an accident. In this context, the 99-th percentile value reflects the potential for larger radionuclide releases at lower probabilities (approximately 100 times lower) that could occur for accidents involving a release. Essential features of the results are summarized below.

- Phase 0 (Pre-Launch): During the pre-launch period, prior to ignition of the Stage 1 liquid rocket engine, most initiating failures result in a mission abort. Those failures that result in on-pad accidents could result in a release at a total probability of $5.9 \times 10^{-6}$ (1 in 170,000). The mean source term is estimated to be 30 Ci.

- Phase 1 (Early Launch): During Phase 1, after which land impacts in the launch area are unlikely, the total probability of release is estimated to be $2.4 \times 10^{-3}$ (or 1 in 420) should an accident occur. The mean source term is estimated to be about 58 Ci.

## TABLE 4-2. SUMMARY OF ACCIDENT PROBABILITIES AND SOURCE TERMS

| Mission Phase [a] | Accident Probability | Conditional Probability of Release [c] | Total Probability of a Release | Source Term [b], [d], Ci | |
|---|---|---|---|---|---|
| | | | | Mean | 99-th Percentile [e] |
| 0: Pre-Launch | Very Unlikely ($7.6 \times 10^{-6}$) | 0.78 | Very Unlikely ($5.9 \times 10^{-6}$) | 30 | 91 |
| 1: Early Launch | | | | | |
| On-Pad Explosion | Unlikely ($1.6 \times 10^{-4}$) | 0.78 | Unlikely ($1.2 \times 10^{-4}$) | 29 | |
| FSII | Unlikely ($1.3 \times 10^{-4}$) | 0.72 | Very Unlikely ($9.2 \times 10^{-5}$) | 1,200 | |
| Stage 2/SC | Very Unlikely ($1.4 \times 10^{-5}$) | 0.20 | Very Unlikely ($2.9 \times 10^{-6}$) | 380 | |
| SCII | Very Unlikely ($2.6 \times 10^{-6}$) | 0.48 | Very Unlikely ($1.2 \times 10^{-6}$) | 12 | |
| Low Altitude FTS | Unlikely ($4.1 \times 10^{-3}$) | 0.53 | Unlikely ($2.1 \times 10^{-3}$) | 12 | |
| Overall Phase 1 | Unlikely ($4.4 \times 10^{-3}$) | 0.54 | Unlikely ($2.4 \times 10^{-3}$) | 58 | 480 |
| 2: Late Launch | $1.3 \times 10^{-2}$ | – | – | – | – |
| 3: Pre-Orbit/Orbit | $1.1 \times 10^{-2}$ | 0.086 | Unlikely ($9.0 \times 10^{-4}$) | 0.70 | 2.2 |
| 4: Orbit/Escape | Unlikely ($4.8 \times 10^{-3}$) | 0.25 | Unlikely ($1.2 \times 10^{-3}$) | 1.6 | 9.5 |
| **Overall Mission [f]** | **$3.3 \times 10^{-2}$** | **0.14** | **Unlikely ($4.5 \times 10^{-3}$)** | **31** | **260** |

Source: DOE 2006a

a. The table presents a composite of the results for the Atlas V 541 and the Delta IV Heavy, determined by taking the probability-weighted value of the two sets of results, treating the conditional probability of having a given launch vehicle as 0.5.

b. The reported composite source term values are within a factor of two of the high-end values when the results for each launch vehicle are considered separately, except for Phase 1, where at a probability of $1.6 \times 10^{-3}$ the potential high-end mean source term is 140 Ci.

c. The conditional probability of a release of $PuO_2$ given that an accident has occurred.

d. Airborne source terms (*i.e.*, that portion of the release which becomes airborne). These source terms are estimated to represent nominally up to 25 percent of the amount released outside of iridium cladding. The remaining, 75 percent of the release would trapped in debris or slag, with the relative amount depending on the accident and the release conditions.

e. Due to the nature of the methodology used in DOE's risk assessment (see Section 4.1.4.1), 99-th percentile source terms were not estimated for the individual Phase 1 accident types. The probability of the 99-th percentile values is a factor of 100 lower than the reported total probability of release.

f. Overall mission values are weighted by the total probability of release for each mission phase.

Notes: Differences in multiplications and summations are due to rounding of results as reported in DOE 2006a. Probability categories, *i.e.*, unlikely, very unlikely, defined by NASA.

Most initiating failures occurring in Phase 1 would lead to activation of the FTS. The elements of the FTS are highly redundant and reliable. As a result, the expected outcome of a Phase 1 accident is ground impact of the spacecraft or portions thereof, including possibly the rover with attached MMRTG, the MMRTG alone, or free GPHS modules, where mechanical damage and, for an Atlas V 541 accident, potential exposure to burning solid propellant, could occur. The probability for this impact configuration with a release is estimated to be $2.1 \times 10^{-3}$ (or 1 in 480), with an estimated mean airborne source term of less than 12 Ci (about 0.02 percent of the $PuO_2$ inventory).

A much less likely outcome of a Phase 1 accident involves failure of some or all of the FTS elements to perform properly. This could lead to ground impact of the spacecraft (with the MMRTG inside) still attached to other launch vehicle stages (Stages 1 and 2, or Stage 2). Since this would require multiple failures of safety systems, such ground impact configurations leading to a release are very unlikely. However, because the MMRTG could impact the ground within the spacecraft at higher velocities and with additional mass above the spacecraft due to the attached Stage(s), the potential for more severe mechanical damage is higher than with the expected accident conditions associated with normal activation of the FTS.

In the impact configurations leading to the largest estimated releases, such as the Intact Stage 2/SC and the FSII, up to about 2 percent of the inventory might be released and become airborne, with estimated mean source terms of 380 Ci and 1,200 Ci, respectively. Both of these events would fall in the very unlikely range.

- Phase 2 (Late Launch): All accidents that could occur in Phase 2 lead to impact of debris in the Atlantic Ocean with no release of $PuO_2$.
- Phase 3 (Pre-Orbit/Orbit): Accidents during Phase 3 include sub-orbital reentries. Prior to the attainment of Earth parking orbit, these conditions could lead to prompt sub-orbital reentry within minutes. Following spacecraft breakup during reentry, this could result in impacts of individual GPHS modules along the vehicle flight path over the Atlantic Ocean and southern Africa. Additional sub-orbital land impacts are possible after crossing over Africa, depending on the launch vehicle selected and its mission timeline. Should the GPHS modules impact hard surfaces (*e.g.*, rock), small releases are possible at ground level. There is a possibility that the SC or portions thereof, including the rover/MMRTG or the MMRTG would survive sub-orbital reentry. The total probability of release in Phase 3 is estimated to be $9.0 \times 10^{-4}$ (or 1 in 1,100). The mean source term is estimated to be 0.7 Ci.
- Phase 4 (Orbit/Escape): Accidents which occur after attaining parking orbit could result in orbital decay reentries from minutes to years after the accident, affecting Earth surfaces between approximately 28° North Latitude and 28° South Latitude. Post-reentry impact releases would be similar to those in Phase 3. The

total probability of a release is estimated to be $1.2 \times 10^{-3}$ (or 1 in 830). The mean source term is estimated to be 1.6 Ci.

No accident scenario leading to escape conditions would be expected to result in a release. The potential exists for an inadvertent long-term (hundreds to thousands of years) reentry should the SC be left in an Earth crossing orbit. Based on considerations of long-term inadvertent reentry for other missions, the probability of such an occurrence is estimated to be less than $1 \times 10^{-7}$.

The specific probability values presented in this DEIS are estimates and will likely differ from those that might ultimately be developed in the more detailed FSAR that would be prepared by DOE if the Proposed Action (Alternative 1) is selected. Some probabilities would likely increase while others may decrease. However, NASA expects the overall probability of an accidental release of radioactive material would not vary substantially from the values presented in this DEIS.

#### 4.1.4.5 Radiological Consequences

The radiological consequences of a given accident that results in a radiological release have been calculated in terms of maximum individual dose, collective dose, health effects, and land area contaminated at or above specified levels. The radiological consequences have been determined from atmospheric transport and dispersion simulations incorporating both launch-site specific and worldwide meteorological and population data. Biological effects models, based on methods prescribed by the National Council on Radiation Protection and Measurements (NCRP) and the International Commission on Radiological Protection (ICRP), were applied to predict the number of health effects following a launch accident that results in a release of $PuO_2$. Additional information on the behavior of plutonium in the environment (environmental transport and health impact mechanisms) can be found in Appendix B.

The maximum individual dose is the mean maximum dose delivered to a single individual for a given accident, considering the probability distribution over all release conditions. Collective dose is the sum of the radiation dose received by all individuals exposed to radiation from a given release in units of “person-rem.” Internal doses are determined using particle-size dependent dose conversion factors based on ICRP-30 (ICRP 1979). The exposure pathways considered include direct inhalation, inhalation of re-suspended material, ingestion (*e.g.*, vegetables, fruit, and seafood), and external exposure. Due to the insoluble nature of $PuO_2$, other secondary exposure pathways (*e.g.*, meat and milk) would be far less important, and their contributions to dose would be negligible.

The health effects represent incremental cancer fatalities induced by releases, determined using ICRP-60 estimators of $5 \times 10^{-4}$ fatalities per person-rem for the general population and $4 \times 10^{-4}$ for workers (ICRP 1990). The health effects estimators are based on a linear, non-threshold model relating health effects and effective dose. This means that health effects decrease as the dose decreases down to zero, rather than assuming a threshold dose below which there would be no health effects. When the probability of incurring a health effect is estimated for each individual in the exposed

population and then the probabilities summed over the population, an estimate of the total health effects in the population results.

Table 4-3 presents a summary of DOE's risk assessment of radiological consequences for each of the mission phases. These consequence estimates represent the best available information at this time. Since the DOE's risk assessment for this DEIS was prepared early in the mission planning process and in advance of the more detailed FSAR analysis that would be prepared if the Proposed Action were pursued, the information and results were developed based on consideration of risk assessments performed for past missions which included nuclear material (*e.g.*, Cassini, MER, and New Horizons), and additional supplemental analyses where considered appropriate. The resulting approach for the risk assessment consists of a combination of scaling the results for past missions on a per curie inventory basis for specific accidents and accident environments, coupled with additional analyses required to make the risk assessment specific to the MSL mission.

The radiological consequences were estimated by mission phase in terms of both the mean and 99-th percentile values. The 99-th percentile radiological consequence is the value predicted to be exceeded 1 percent of the time for an accident with a release. In this context, the 99-th percentile value reflects the potential for higher radiological consequences to the exposed population at lower probabilities. For most accidents, the 99-th percentile consequences are 5 to 15 times the mean estimates reported in this EIS, but at probabilities a factor of 100 lower than the mean probabilities.

The radiological consequences summarized in Table 4-3 are generally proportional to the source terms listed in Table 4-2, except that the scaling factors vary with the type and nature of the release. Key factors include the particle size distribution of the release, release height, and energy of the release. The higher dose numbers are associated with very small particles that might be released if the $PuO_2$ were exposed to solid propellant fires. The radiological dose per curie released is about ten times higher with the $PuO_2$ exposed to solid propellant fires. Key results for the mean estimates are summarized below; the corresponding 99-th percentile estimates can be found in Table 4-3.

- Phase 0 (Pre-Launch): The initiating failures that result in Phase 0 accident configurations are very unlikely, having very low probabilities of occurrence. The overall mean probability of a release is $5.9 \times 10^{-6}$ (or 1 in 170,000) during Phase 0. Most problems that arise during Phase 0 can be successfully mitigated by safety systems and procedures leading to safe hold or termination of the launch countdown.

  If an accident were to occur during Phase 0, however, there is a potential for measurable releases and contamination. The probability of the MMRTG being close to large pieces of burning solid propellant would be higher in Phase 0 accidents than in other phases. The mean maximum dose to an individual is estimated to be approximately 0.089 rem, about 25 percent of the dose an

## TABLE 4-3. SUMMARY OF ESTIMATED RADIOLOGICAL CONSEQUENCES

| Mission Phase [a] | Total Probability of Release | Maximum Individual Dose, rem | | Collective Dose, person-rem | | Health Effects [c] | | Land Contamination [d] $km^2$ | |
|---|---|---|---|---|---|---|---|---|---|
| | | Mean | 99-th Percentile [f] | Mean | 99-th Percentile [f] | Mean | 99-th Percentile [f] | Mean | 99-th Percentile [f] |
| 0: Pre-Launch [b] | Very Unlikely ($5.9 \times 10^{-6}$) | 0.089 | 1.4 | 430 | 2,400 | 0.21 | 1.2 | 4.2 | 25 |
| 1: Early Launch | | | | | | | | | |
| On-Pad Explosion | Unlikely ($1.2 \times 10^{-4}$) | 0.34 | | 1,300 | | 0.66 | | 3.4 | |
| FSII[b] | Very Unlikely ($9.2 \times 10^{-5}$) | 0.65 | | 6,900 | | 3.4 | | 86 | |
| Stage2/SV | Very Unlikely ($2.9 \times 10^{-6}$) | 7.4 | | 33,000 | | 16 | | 35 | |
| SVII | Very Unlikely ($1.2 \times 10^{-6}$) | 0.082 | | 340 | | 0.17 | | 2.1 | |
| Low Altitude FTS | Unlikely ($2.1 \times 10^{-3}$) | 0.10 | | 400 | | 0.20 | | 2.3 | |
| Overall Phase 1[b] | Unlikely ($2.4 \times 10^{-3}$) | 0.14 | 3.5 | 740 | 11,000 | 0.37 | 5.4 | 5.6 | 34 |
| 2: Late Launch | — | — | — | — | — | — | — | — | — |
| 3: Pre-Orbit | Unlikely ($9.0 \times 10^{-4}$) | 0.23 | 1.6 | 6.4 | 34 | 0.0032 | 0.017 | 0.016 | 0.082 |
| 4: Orbit | Unlikely ($1.2 \times 10^{-3}$) | 0.70 | 4.7 | 64 | 790 | 0.032 | 0.40 | 0.035 | 0.21 |
| **Overall Mission [e]** | **Unlikely ($4.5 \times 10^{-3}$)** | **0.31** | **3.4** | **410** | **6,000** | **0.20** | **3.0** | **3.0** | **18** |

Source: DOE 2006a

a. The table presents a composite of the results for the Atlas V 541 and the Delta IV Heavy, determined by taking the probability-weighted value of the two sets of results, treating the conditional probability of having a given launch vehicle as 0.5.

b. The reported values are within a factor of two of the high-end values when the results for each launch vehicle are considered separately, with three exceptions. For Phase 0, at a lower probability of $2.1 \times 10^{-6}$, potential high-end mean consequences are 0.47 rem for the maximum individual doses, 1,800 person-rem collective dose, 0.90 health effects. For Phase 1 FSII, at a probability 30 times lower ($3.1 \times 10^{-6}$), potential high-end mean consequences are 28 rem for the maximum individual dose, 130,000 person-rem collective dose, 62 health effects. Overall Phase 1 consequences are still within a factor of 2 except for a high-end estimate of 12 $km^2$ for land contamination, a factor of 2.1 higher. The higher dose numbers are associated with very small particles that might be released if the $PuO_2$ were exposed to solid propellant fires.

c. Based on ICRP-60 health effects estimators of $5 \times 10^{-4}$ health effects per person-rem for the general population and $4 \times 10^{-4}$ health effects per person-rem for workers.

d. Land area contaminated above 0.2 $\mu Ci/m^2$; 1 $km^2$ = 0.386 $mi^2$.

e. Overall mission values weighted by total probability of release for each mission phase.

f. 99-th percentile consequences were not estimated for the individual accident types which could occur during Phase 1. The probability of the 99-th percentile values is a factor of 100 lower than the reported total probability of release.

Notes: Differences in multiplications and summations are due to rounding of results as reported in DOE 2006a. Probability categories, *i.e.*, unlikely, very unlikely, defined by NASA.

individual might receive annually from natural background radiation[7]. The mean collective dose is estimated to be 430 person-rem to the potentially exposed population.

For Phase 0 accidents with a release (probability of 1 in 170,000), the mean area contaminated above 0.2 microcuries per square meter (μCi/$m^2$) (see Section 4.1.4.7) is estimated to be about 4.2 square kilometers ($km^2$) (about 1.6 square miles ($mi^2$)). Detectable levels below 0.2 μCi/$m^2$ would be expected over a larger area. Assuming no mitigation actions, such as sheltering and exclusion of people from contaminated land areas, the radiation doses to the potentially exposed population are predicted to result in 0.21 mean health effects among the potentially exposed population.

- Phase 1 (Early Launch): The Phase 1 consequences consist of contributions from two types of accident scenarios. Most initiating failures occurring in Phase 1 would lead to activation of the FTS. The elements of the FTS are highly redundant and very reliable. As a result, the expected outcome of a Phase 1 accident is that the SC and MMRTG or its components could fall free to the ground, and would be subject to mechanical damage and potential exposure to burning solid propellant. The probability for this unlikely impact configuration with a release is $2.1 \times 10^{-3}$ (or 1 in 480). The mean maximum individual dose is estimated to be 0.10 rem, equivalent to about 28 percent of the dose an individual might receive annually from natural background radiation. It would increase the chance of a health effect in the person receiving the mean maximum individual dose by about 0.005 percent. The mean collective dose is estimated to be 400 person-rem to the potentially exposed population.

  The risk assessment indicates that about 2.3 $km^2$ (about 0.9 $mi^2$) could be contaminated above 0.2 μCi/$m^2$. Assuming no mitigation action, such as sheltering, the radiation dose to the potentially exposed population is predicted to result in 0.2 mean health effects among the potentially exposed population over the long term.

  A much less likely outcome of a Phase 1 accident involves failure of some or all of the FTS elements to perform properly. This could lead to ground impact of the spacecraft (with the MMRTG inside) still attached to other launch vehicle stages (Stages 1 and 2, or Stage 2). Since this would require multiple failures of safety systems, such ground impact configurations leading to a release are very unlikely. However, because the MMRTG could impact the ground within the spacecraft at high speed, the potential for more severe mechanical damage and exposure to burning liquid and, possibly, solid propellant, could result in higher source terms.

  In the more severe impact configurations leading to the largest estimated releases, such as the FSII, approximately 1,200 Ci (about 2 percent of the

[7] An average of about 0.36 rem per year for an individual in the United States, including both natural sources and other sources such as medical X-rays; see Section 3.2.5 for further information.

inventory) might become airborne. In the highest consequence case identified in footnote (b) of Table 4-3, exposures as high as about 28 rem to the maximum exposed individual might occur with a total probability of $3.1 \times 10^{-6}$ or one in 320,000. An estimated area of nearly 86 $km^2$ (about 33 $mi^2$) might be contaminated above 0.2 $\mu Ci/m^2$. Detectable levels below 0.2 $\mu Ci/m^2$ would be expected over a larger area. Assuming no mitigation action, such as sheltering, radiation doses to the potentially exposed population are predicted to result in an estimated 62 mean health effects.

If the $PuO_2$ released from a damaged MMRTG were not exposed to burning solid propellant, the doses would likely be about ten times lower. Similar land areas, however, might be contaminated.

- Phase 2 (Late Launch): No radiological consequences would be expected from an accident that could occur during Phase 2 since any accident during this mission phase would lead to impact of debris in the Atlantic Ocean with no release of $PuO_2$ from the MMRTG.
- Phases 3 (Pre-Orbit/Orbit): The total probability of a release in Phase 3, categorized as unlikely, is estimated to be $9.0 \times 10^{-4}$ (or 1 in 1,100). Mean consequences are estimated to be 0.23 rem for maximum individual dose, 6.4 person-rem for collective dose, and 0.0032 health effects among the potentially exposed population.
- Phase 4 (Orbit/Escape): The total probability of a release in Phase 4, categorized as unlikely, is estimated to be $1.2 \times 10^{-3}$ (or 1 in 830). Mean consequences are estimated to be 0.7 rem for maximum individual dose, 64 person-rem for collective dose, and 0.032 health effects among the potentially exposed population.

#### 4.1.4.6 Discussion of the Results

*Maximum Individual Doses*

The maximum individual dose is the maximum dose delivered to a single individual for each accident. During Phase 1, the predicted mean radiation dose to the maximally exposed individual ranges from about 0.1 rem for the most probable result of an unlikely launch area accident up to about 28 rem for a very unlikely FSII in combination with burning solid propellant. No short-term radiological effects would be expected from any of these exposures. Each exposure would increase the statistical likelihood of a health effect. It should be noted that the prediction of doses to the maximally exposed individual is subject to large variations and uncertainties in the locations of individuals, meteorological conditions, periods of exposure, and dispersion modeling.

*Population Exposures*

Impacts to downwind populations that might be exposed to releases following an accident are estimated by first calculating the collective dose to that population. This is simply the sum of the radiation dose received by all individuals exposed to radiation from a given release. These collective doses are assumed to result in the potential for

health effects among the potentially exposed population following an accident. The health effects induced by releases are calculated using the methods described above in Section 4.1.4.5. The consequences discussed below have been estimated considering impacts to both the local population and the global population. Because of a variety of factors, principally involving meteorological conditions at the time of launch and the amount and particle size distribution of any $PuO_2$ released, not all persons in the affected regions would be exposed to a release.

Prior to launch, most problems that could potentially lead to an accident would be mitigated by safety systems and procedures that would lead to safe hold or termination of the launch countdown. After launch, most significant problems would lead to activation of the FTS, which would result in the destruction of all of the vehicle stages. This would lead to the spacecraft or portions thereof, including possibly the rover with attached MMRTG, the MMRTG alone, or free GPHS modules, falling to the ground, where it could be subject to ground impact mechanical damage and potential exposure to burning solid propellant. The predicted release for this scenario is estimated to be about 0.02 percent of the inventory of the MMRTG. The probability for this scenario with a release is $2.1 \times 10^{-3}$ (or 1 in 480). Assuming no mitigation actions, such as sheltering and exclusion of people from contaminated land areas, the radiation dose to the potentially exposed population is predicted to result in less than one additional health effect over the long term. The mean estimate for this scenario is 0.2 health effects.

For very unlikely launch area accidents, higher mean releases, up to approximately 2 percent of the MMRTG's inventory, could occur with potentially higher consequences. Assuming no mitigation actions such as sheltering, mean health effects among the potentially exposed population for these very unlikely accidents are estimated to range from less than 1 health effect up to 62 health effects among the regional and worldwide populations.

In the event of a launch area accident, it is unlikely that any given racial, ethnic, or socioeconomic group of the population would bear a disproportionate share of the consequences.

#### 4.1.4.7 Impacts of Radiological Releases on the Environment

The environmental impacts of the postulated accidents include the potential for $PuO_2$ to be released to the environment, resulting in land and surface water contamination. The health and environmental impacts associated with plutonium-238 in the environment were addressed extensively in the EISs for previous NASA missions that used RTGs, including the Galileo, Ulysses, Cassini, and New Horizons missions (NASA 1989, NASA 1990, NASA 1995, NASA 1997, NASA 2005). The Ulysses EIS, for example, also identified the potential for launch area accidents contaminating comparable land areas. That EIS contained extensive evaluations of the potential impacts of $PuO_2$ releases on natural vegetation, wetlands, agricultural land, urban areas, inland water, the ocean, and other global areas. Based on these previous analyses, the potential impacts of plutonium releases from the launch area accidents on the environment are discussed in Appendix B and summarized here.

The affected environment, described in Section 3 of this EIS, includes the regional area near CCAFS and the global area. Launch area accidents (Phases 0 and 1) would initially release material into the regional area, defined in the EIS to be within 100 km (62 mi) of the launch pad. Since some of the accidents result in the release of very fine particles (less than a micron in diameter), a portion of such releases could be transported beyond 100 km (62 mi) and become well mixed in the troposphere, and have been assumed to potentially affect persons living within a latitude band from approximately 23° North to 30° North. Releases during Phase 3 could involve reentering GPHS modules that could impact the ground in southern Africa. Releases during Phase 4 could affect the environment anywhere between 28° North and 28° South latitude.

Potential environmental contamination was evaluated in terms of areas exceeding various screening levels (0.1 and 0.2 $\mu Ci/m^2$), and dose-rate related criteria (15, 25, and 100 millirem per year (mrem/yr)) considered by the U.S. Environmental Protection Agency (EPA), the Nuclear Regulatory Commission, and DOE in evaluating the need for land cleanup following radioactive contamination.

The risk assessment for this DEIS uses the 0.2 $\mu Ci/m^2$ screening level (a screening level used in prior NASA environmental documentation (*e.g.*, NASA 1989, NASA 1997, NASA 2003, NASA 2005)) as an indicator of the extent of land area contaminated due to a release of $PuO_2$ from a potential launch accident. The results are summarized in Table 4-3. The area of land contaminated above the EPA lifetime-risk criterion, associated with an average annual dose rate criterion of 15 mrem/yr, could be higher or lower than the land area contaminated above the 0.2 $\mu Ci/m^2$ level in the first year following the release, depending on the particle size distribution of the release and the potential for resuspension. The resuspension contribution to dose assumes that no mitigation measures are taken.

DOE's risk assessment indicates that for the most likely type of launch area accidents, the intentional destruction of all the vehicle stages would result in about 2.3 $km^2$ (about 0.9 $mi^2$) being contaminated above 0.2 $\mu Ci/m^2$. The risk assessment also indicates that in at least one very unlikely ground impact configuration, FSII with a total probability of release of $9.2 \times 10^{-5}$ (or 1 in 11,000), a mean area of 86 $km^2$ (about 33 $mi^2$) could be contaminated above 0.2 $\mu Ci/m^2$. Detectable levels below 0.2 $\mu Ci/m^2$ would be expected over an even larger area.

Land areas contaminated at levels above 0.2 $\mu Ci/m^2$ would potentially need further action, such as monitoring or cleanup. Costs associated with these efforts, as well as continued monitoring activities, could vary widely depending upon the characteristics of the contaminated area. Potential cost estimating factors for decontamination of various land types are summarized in Table 4-4. These cost factors address a wide variety of possible actions, including land acquisition, waste disposal, site restoration, and final surveys of remediated sites.

**TABLE 4-4. POTENTIAL LAND DECONTAMINATION COST FACTORS**

| Land Type | Cost Factor in 2009 Dollars | |
|---|---|---|
| | Cost per $km^2$ | Cost per $mi^2$ |
| Farmlands | $103 million | $267 million |
| Rangeland | $101 million | $261 million |
| Forests | $185 million | $478 million |
| Mixed-Use Urban Areas | $562 million | $1.5 billion |

Source: Adapted from Chanin et al. 1996

The Price-Anderson Act of 1957, as amended (42 U.S.C. 2210), governs liability and compensation in the event of a nuclear incident arising out of the activities of the DOE. The Price-Anderson Act is incorporated into the Atomic Energy Act of 1954, as amended (42 U.S.C. 2011 *et seq.*). A "nuclear incident" is defined under the Atomic Energy Act as “any occurrence, including an extraordinary nuclear occurrence, within the United States causing, within or outside the United States, bodily injury, sickness, disease, or death, or loss of or damage to property, or loss of use of property, arising out of or resulting from the radioactive, toxic, explosive, other hazardous properties of source, special nuclear or byproduct material…" (42 U.S.C. 2014 (q)). In the case of the MSL mission, DOE retains title to the MMRTG. The MMRTG would, therefore, be subject to Price-Anderson Act provisions. In the unlikely event that an accident were to occur resulting in release of $PuO_2$, affected property owners would be eligible for reimbursement for loss of property due to contamination.

In addition to the potential direct costs of radiological surveys, monitoring, and potential cleanup following an accident, there are potential secondary societal costs associated with the decontamination and mitigation activities with the very unlikely, potentially higher consequence launch area accidents. Those costs could include, but may not be limited to:

- temporary or longer term relocation of residents;
- temporary or longer term loss of employment;
- destruction or quarantine of agricultural products, including citrus crops;
- land use restrictions (which could affect real estate values, tourism and recreational activities);
- restriction or bans on commercial fishing; and,
- public health effects and medical care.

#### 4.1.4.8 Mission Risks

A summary of the mission risks is presented in Table 4-5. For the purpose of this EIS, risk is defined as the expectation of health effects in a statistical sense (*i.e.*, the product of total probability times the mean health effects resulting from a release, and then

summed over all conditions leading to a release). The risk of health effects in the potentially exposed populations is determined for each mission phase and the overall mission. Since the health effects resulting from a release equals the sum of the probability of a health effect for each individual in the exposed population, risk can also be interpreted as the total probability of one health effect given the mission. The overall radiological risk for the MSL mission is estimated to be $9.1 \times 10^{-4}$. Thus, the total probability of one health effect for the Proposed Action (Alternative 1) is about 1 in 1,100.

**TABLE 4-5. SUMMARY OF HEALTH EFFECT MISSION RISKS**

| Mission Phase [(a), (b)] | Accident Probability | Conditional Probability of a Release | Total Probability of a Release | Mean Health Effects | Mission Risks |
|---|---|---|---|---|---|
| 0: Pre-Launch | $7.6 \times 10^{-6}$ | 0.78 | Very Unlikely ($5.9 \times 10^{-6}$) | 0.21 | $1.3 \times 10^{-6}$ |
| 1: Early Launch | $4.4 \times 10^{-3}$ | 0.54 | Unlikely ($2.4 \times 10^{-3}$) | 0.37 | $8.7 \times 10^{-4}$ |
| 2: Late Launch | $1.3 \times 10^{-2}$ | — | — | — | — |
| 3: Pre-Orbit/Orbit | $1.1 \times 10^{-2}$ | 0.086 | Unlikely ($9.0 \times 10^{-4}$) | 0.0032 | $2.9 \times 10^{-6}$ |
| 4: Orbit/Escape | $4.8 \times 10^{-3}$ | 0.25 | Unlikely ($1.2 \times 10^{-3}$) | 0.032 | $3.8 \times 10^{-5}$ |
| **Overall Mission** | **$3.3 \times 10^{-2}$** | **0.14** | **Unlikely ($4.5 \times 10^{-3}$)** | **0.2** | **$9.1 \times 10^{-4}$** |

Source: DOE 2006a

a. The table presents composite of the results for the Atlas V 541 and the Delta IV Heavy, determined by taking the probability-weighted value of the two sets of results, treating the conditional probability of having a given launch vehicle as 0.5. Accident probabilities are the average of individual values for the two vehicles. Based on the current state of knowledge, the specific accident probabilities for the accident conditions for each vehicle are expected to be similar.

b. The reported values are within a factor of two of the high-end values when the results for each launch vehicle are considered separately.

Notes: Differences in multiplications and summations are due to rounding of results as reported in DOE 2006a. Probability categories, *i.e.*, unlikely, very unlikely, defined by NASA.

The risk contribution from Phase 1 accidents, $8.7 \times 10^{-4}$ (or a probability of about 1 in 1,100 that a health effect will occur), represents 95 percent of the radiological risk for the MSL mission. The primary contributors to the Phase 1 risk in order of significance are (1) Low Altitude FTS, (2) FSII, and (3) On-Pad Explosion. Phase 4 contributes 4.2 percent of the overall mission risk, due primarily to releases from GPHS modules impacting hard surfaces (*e.g.* rock) following orbital reentry and possibly other impact configurations up to and including the spacecraft.

The contributions to risk within 100 km (62 mi) of the launch site and in the global area are summarized in Table 4-6. The launch area risk is about 59 percent of the overall mission risk, while the risk to global areas is 41 percent. The launch area risks are due entirely from accidents during Phases 0 and 1, with Phase 1 being the primary contributor. The global risks are due to accidents in all mission phases, with Phase 1

being the primary contributor due to the atmospheric transport of small particles beyond 100 km from the launch site.

**TABLE 4-6. HEALTH EFFECT MISSION RISK CONTRIBUTIONS BY AFFECTED REGION**

| Mission Phase [(a), (b)] | Mission Risks | | |
|---|---|---|---|
| | Launch Area [(c)] | Global [(d)] | Total |
| 0: Pre-Launch | $8.1 \times 10^{-7}$ | $4.4 \times 10^{-7}$ | $1.3 \times 10^{-6}$ |
| 1: Early Launch | $5.4 \times 10^{-4}$ | $3.3 \times 10^{-4}$ | $8.7 \times 10^{-4}$ |
| 2: Late Launch | — | — | — |
| 3: Pre-Orbit/Orbit | — | $2.9 \times 10^{-6}$ | $2.9 \times 10^{-6}$ |
| 4: Orbit/Escape | — | $3.8 \times 10^{-5}$ | $3.8 \times 10^{-5}$ |
| **Overall Mission** | **$5.4 \times 10^{-4}$** | **$3.7 \times 10^{-4}$** | **$9.1 \times 10^{-4}$** |

Source: DOE 2006a

a. The table presents composite of the results for the Atlas V 541 and the Delta IV Heavy, determined by taking the probability-weighted value of the two sets of results, treating the conditional probability of having a given launch vehicle as 0.5

b. The reported values are within a factor of two of the high-end values when the results for each launch vehicle are considered separately.

c. Phases 0 and 1: within 100 km (62 mi) of the launch site.

d. Phases 0, 1 and 2: within approximately 23° North and 30° North Latitude; Phase 3: southern Africa; Phase 4: land impacts between 28° North and 28° South Latitude.

Note: Differences in summations may be due to rounding.

*Individual Risks*

Individual risk can be interpreted as the probability of an individual in the exposed population incurring a fatal cancer. For an accident near the launch site, not everyone within the regional area would be expected to receive a dose as a result of the accident. Due to meteorological conditions prevailing at the time of launch, only a portion of the total regional population is estimated to receive some measurable radiological exposure should an accident occur.

Even those individuals within the population, such as those very close to the launch area that might receive the highest exposures would face very small risks. The risk to the maximally exposed individual within the launch-area and global populations (Table 4-7) is estimated to be less than 1 in 1,000,000 for the MSL mission. Most people in the potentially exposed population would have much lower risks.

The individual risk estimates are small compared to other risks. For example, Table 4-8 presents information on annual individual fatality risks to residents of the United States due to various types of hazards. This data indicates that in 2000 the average individual risk of accidental death in the United States was about 1 in 3,000 per year, while the average individual risk of death due to any disease, including cancer, was about 1 in 130.

**TABLE 4-7. MAXIMUM INDIVIDUAL RISK**

| Mission Phase [(a), (b)] | Total Probability of Release | Maximum Individual Dose, (rem) | Maximum Individual Risk [(c), (d)] |
|---|---|---|---|
| 0: Pre-Launch | Very Unlikely ($5.9x10^{-6}$) | 0.089 | $2.6x10^{-10}$ |
| 1: Early Launch | Unlikely ($2.4x10^{-3}$) | 0.14 | $1.7x10^{-7}$ |
| 2: Late Launch | - | - | - |
| 3: Pre-Orbit/Orbit | Unlikely ($9.0x10^{-4}$) | 0.23 | $1.0x10^{-7}$ |
| 4: Orbit/Escape | Unlikely ($1.2x10^{-4}$) | 0.70 | $4.2x10^{-7}$ |

Source: DOE 2006a

a. The table presents composite of the results for the Atlas V 541 and the Delta IV Heavy, determined by taking the probability-weighted value of the two sets of results, treating the conditional probability of having a given launch vehicle as 0.5.

b. The reported values are within a factor of two of the high-end values when the results for each launch vehicles are considered separately with the exception of Phase 0. For Phase 0, at a lower probability $2.1x10^{-6}$, a high-end mean maximum individual dose of 0.47 rem was estimated, with a corresponding maximum individual risk of $5.0x10^{-10}$.

c. Determined as the product of total probability of release, maximum individual dose (mean value) and a health effects estimator of $5x10^{-4}$ latent cancer fatalities per rem.

d. The individuals associated with the maximum individual risk in Phase 0 and 1 are assumed to be the same individual, so the two risks are additive. The individuals associated with the maximum individual risk in Phases 3 and 4 would not be the same individual due to different global regions potentially affected.

Note: Probability categories, *i.e.*, unlikely, very unlikely, defined by NASA.

### 4.1.4.9 Uncertainty

An uncertainty analysis to estimate uncertainties in probabilities, source terms, radiological consequences, and mission risks has not been performed as part of this report. Such an analysis will be performed in the Final Safety Analysis Report if the Proposed Action (Alternative 1) is pursued. Based on experience with uncertainty analyses in the preliminary risk assessment of previous missions (*e.g.*, for the Cassini, Mars Exploration Rover, and New Horizons missions), the uncertainty in the estimated mission risk for the MSL mission can be approximated. The best estimate of the MSL mission risk of $9.1x10^{-4}$ (or a probability of about 1 in 1,100 that a health effect will occur) can be treated as the median of the uncertainty probability distribution *(i.e.*, it is equally probable that the mission risk could be higher or lower than this value). The mission risks at the 5 and 95 percent confidence levels are then estimated to be $3.6x10^{-5}$ (or a probability of about 1 in 28,000 that a health effect will occur) and $2.3x10^{-2}$ (or a probability of about 1 in 43 that a health effect will occur), respectively.

**TABLE 4-8. CALCULATED INDIVIDUAL RISK AND PROBABILITY OF FATALITY BY VARIOUS CAUSES IN THE UNITED STATES IN 2000**

| Accident Type | Number of Fatalities | Approximate Individual Risk Per Year | Probability |
|---|---|---|---|
| Railway | 25 | $8.88 \times 10^{-8}$ | 1 in 11 million |
| Floods | 38 | $1.35 \times 10^{-7}$ | 1 in 7 million |
| Tornadoes | 41 | $1.46 \times 10^{-7}$ | 1 in 6.8 million |
| Lightning | 51 | $1.81 \times 10^{-7}$ | 1 in 6 million |
| Extreme Heat | 158 | $5.61 \times 10^{-7}$ | 1 in 2 million |
| Legal Intervention | 345 | $1.23 \times 10^{-6}$ | 1 in 800,000 |
| All Weather | 476 | $1.69 \times 10^{-6}$ | 1 in 600,000 |
| Manufacturing | 668 | $2.37 \times 10^{-6}$ | 1 in 400,000 |
| Accidental Discharge of Firearms | 808 | $2.87 \times 10^{-6}$ | 1 in 300,000 |
| Water, Air and Space Transport Accidents (includes unspecified transport accidents) | 1,786 | $6.35 \times 10^{-6}$ | 1 in 200,000 |
| Accidental Exposure to Smoke, Fires and Flames | 3,265 | $1.16 \times 10^{-5}$ | 1 in 90,000 |
| Accidental Drowning and Submersion | 3,343 | $1.19 \times 10^{-5}$ | 1 in 80,000 |
| All Injuries at Work | 5,291 | $1.88 \times 10^{-5}$ | 1 in 50,000 |
| Accidental Poisoning and Exposure to Noxious Substances | 9,893 | $3.52 \times 10^{-5}$ | 1 in 30,000 |
| Falls | 12,604 | $4.48 \times 10^{-5}$ | 1 in 20,000 |
| Drug-induced deaths | 15,852 | $5.63 \times 10^{-5}$ | 1 in 18,000 |
| Assault (Homicide) | 16,137 | $5.73 \times 10^{-5}$ | 1 in 17,000 |
| Alcohol-induced deaths | 18,539 | $6.59 \times 10^{-5}$ | 1 in 15,000 |
| Suicide | 28,332 | $1.01 \times 10^{-4}$ | 1 in 10,000 |
| Motor Vehicle | 41,804 | $1.49 \times 10^{-4}$ | 1 in 7,000 |
| All Accidents | 93,592 | $3.33 \times 10^{-4}$ | 1 in 3,000 |
| All Diseases | 2,192,094 | $7.79 \times 10^{-3}$ | 1 in 130 |
| **All Causes** | **2,404,598** | **$8.54 \times 10^{-3}$** | **1 in 100** |

Sources: USBC 2000a, BLS 2000, NOAA 2001, HHS 2001

Note: The census population of the United States for the year 2000 was 281,421,906.

### 4.1.5 Radiological Contingency Response Planning

Prior to launch of the MSL mission, a comprehensive set of plans would be developed by NASA to ensure that any launch accident could be met with a well-developed and tested response. NASA's plans would be developed in accordance with the National Response Plan (NRP) (DHS 2004) and the NRP Nuclear/Radiological Incident Annex with the combined efforts of the U.S. Department of Homeland Security (DHS), DHS's Federal Emergency Management Agency, DOE, the U.S. Department of Defense

(DOD), the U.S. Department of State (DOS), the U.S. Environmental Protection Agency (EPA), the State of Florida, Brevard County, and local organizations. These organizations and other Federal agencies, as appropriate, could be involved in response to a radiological emergency.

The radiological emergency response plan would be exercised prior to launch to verify that the response interfaces, command channels, and field response-organizations would be prepared to respond in the unlikely event of a launch accident. NASA would be the Coordinating Agency, and in the event of a declaration of an Incident of National Significance, would work with the DHS to coordinate the entire Federal response for launch accidents occurring within United States jurisdiction. Should a release of radioactive material occur in the launch area, the State of Florida, Brevard County, and local governments would determine an appropriate course of action for any regional areas (such as sheltering in place, evacuation, exclusion of people from contaminated land areas, or no action required) and would have full access to the coordinated Federal response. For accidents outside United States' jurisdiction defined as Incidents of National Significance, NASA and DHS would assist the DOS in coordinating the United States' response via diplomatic channels and in deploying Federal resources as requested.

To manage the radiological contingency response, NASA would establish a radiological emergency response capability that would include a radiological assessment and command center as well as field monitoring assets deployed prior to launch. The assessment and command center would be the focal point for NASA and DHS coordination efforts. This center would also be used to coordinate the initial Federal response to a radiological contingency until the MSL spacecraft has left Earth orbit. Pre-deployed assets to support a response to a potential launch accident would include representation from NASA, DHS, DOE, DOD, DOS, EPA, USAF, the National Oceanic and Atmospheric Administration, the State of Florida, and Brevard County. An additional control center outside the KSC/CCAFS boundaries would be established with monitoring assets deployed prior to launch for radiological monitoring and assessment activities required in local areas.

If impact occurs in the ocean following an accident, NASA would coordinate with the DHS, the U.S. Coast Guard, the U.S. Navy, and DOE to initiate security measures and assess the feasibility of search and retrieval operations. Efforts to recover the MMRTG or its components would be based on technical feasibility and in consideration of any potential health hazards presented to recovery personnel, and potential environmental impacts.

## 4.2 ENVIRONMENTAL IMPACTS OF ALTERNATIVE 2

With Alternative 2, NASA would discontinue preparations for the Proposed Action (Alternative 1) and implement an alternative MSL mission. The alternative MSL mission would include an autonomous rover that would perform science operations on the surface of Mars. A solar array would provide the necessary electric power to operate the MSL rover and its science instruments.

The MSL spacecraft would be launched on either an Atlas V or a Delta IV launch vehicle (see Section 2.1.5) from SLC-41 or SLC-37, respectively, at CCAFS. The launch opportunity would occur during September – November 2009 with arrival dates of the spacecraft at Mars ranging from mid-July 2010 to mid-October 2010.

### 4.2.1 Environmental Consequences of Preparing for Launch

With Alternative 2 the potential environmental consequences of preparing for launch would be the same as those described in Section 4.1.1 above for the Proposed Action with the exception that some spacecraft and launch vehicle integration personnel would not be exposed to radiation from the MMRTG during pre-launch testing and integration, since a radioisotope power system, the MMRTG, would not be used as the source of electrical power for the Alternative 2 MSL rover.

### 4.2.2 Environmental Impacts of a Normal Launch

With Alternative 2 the primary environmental impacts of a normal launch of the MSL mission would be the same as those described in Section 4.1.2 above for the Proposed Action (Alternative 1).

### 4.2.3 Environmental Impacts of Potential Accidents

With Alternative 2 the environmental non-radiological impacts of potential accidents would be the same as those described in Section 4.1.3 above for the Proposed Action.

Since a MMRTG would not be used as the source of electrical power for the MSL rover, there would be negligible radiological consequences from a launch accident. The small quantities of radioactive materials in the APXS and DAN science instruments on the rover (see Section 2.1.2) would be negligible compared to that contained in the MMRTG planned for use in the Proposed Action (Alternative 1). In a launch accident, their use would result in contributions to mission risks and related radiological consequences, as estimated by DOE (DOE 2006b), of nominally less than 0.01 percent of those associated with the MMRTG under the Proposed Action (Alternative 1) described in Section 4.1.4.

However, as the MSL mission and spacecraft designs mature, NASA may reconsider the need for radioisotope heater units (RHU) to provide additional heat to critical rover components (see Section 2.4.2). The use of up to 30 RHUs for this alternative would result in mission risks and related radiological consequences, as estimated by DOE (DOE 2006b), of nominally $1.5 \times 10^{-5}$ (2 percent) of the estimated risks and consequences associated with the Proposed Action (Alternative 1), described in Section 4.1.4. In that event, NASA would consider the need for additional environmental documentation.

## 4.3 ENVIRONMENTAL IMPACTS OF THE NO ACTION ALTERNATIVE

Under the No Action Alternative, preparations for the proposed MSL mission would be discontinued and the mission would not be implemented. Environmental impacts associated with preparation of the proposed MSL spacecraft and the processing of the

launch vehicle would not occur. There would be no local or global launch-related environmental impacts.

As a result of the No Action Alternative, NASA could decide to utilize the 2009 launch opportunity to Mars for a different mission which could address some of the objectives of the proposed MSL mission or could have completely different objectives. In either case such a mission would be outside the scope of this EIS and new environmental documentation would be prepared.

## 4.4 CUMULATIVE IMPACTS

The potential cumulative impacts associated with use of the launch vehicles and facilities addressed within this DEIS have been assessed using currently available information. Implementing either the Proposed Action (Alternative 1) or Alternative 2 (*i.e.*, launch of the MSL mission) would not increase the number of either Atlas V or Delta IV launches beyond the scope of previously approved programs from CCAFS (USAF 1998, USAF 2000).

Various components of the spacecraft and launch vehicle for the proposed MSL mission would be manufactured at different sites in the United States, with final integration of the components occurring at KSC and CCAFS. Each of these sites would be required to follow applicable Federal, State, and local regulations governing areas such as air pollution, noise ordinances, wastewater disposal, pollution prevention, disposal of hazardous waste, and worker safety and health (see Section 4.9). Spacecraft and launch vehicle manufacturing are specialized activities with only a limited number of units manufactured each year. While such activities could generate air pollutants, noise, and hazardous waste, any quantities would be small compared to major industrial activities and subject to the appropriate Federal, State, and local environmental laws and regulations pertinent to the individual manufacturing facilities.

The use of the facilities at KSC and CCAFS for processing the MSL spacecraft, launch vehicle components, and for launch of the mission would be consistent with existing land uses at each site. No new processing facilities for the MSL mission are expected at either KSC or CCAFS, and any impacts from use of existing facilities are expected to be within the scope of previously approved programs (*e.g.*, USAF 1998, USAF 2000, NASA 2002). Implementing the MSL mission would be unlikely to add new jobs to the workforce at either site.

Launching the MSL spacecraft would principally contribute to exhaust emission impacts on and near either SLC-37 or SLC-41 at CCAFS, depending on the selected launch vehicle. The USAF has monitored numerous launches from CCAFS (USAF 1998). Launch could result in scorched vegetation, and partially or completely defoliated trees near the launch complex from flame and acidic deposition. Deposition could also impact nearby bodies of water, resulting in temporary elevation of acidity levels. While these impacts may persist with continued use of either launch complex, they are probably not irreversible. At KSC, NASA found that in affected areas near the Space Shuttle launch pads, vegetation reestablished itself after the launches stopped (Schmalzer *et. al.* 1998).

On a short-term basis, the MSL launch would contribute negligible amounts of ozone-depleting chemical compounds to the stratosphere. The USAF has estimated that the total contribution from large expendable launch vehicles with SRBs to the average annual depletion of ozone would be small (approximately 0.014 percent per year). By comparison, a 3 percent to 7 percent annual decrease in ozone at mid-latitudes occurs as a result of the current accumulation of all ozone-depleting substances in the stratosphere (USAF 2000). However, the ozone depletion trail from a launch vehicle has been estimated to be largely temporary, and would be self-healing within a few hours of the vehicle's passage (AIAA 1991). Furthermore, because launches at CCAFS are always separated by at least a few days, combined impacts in the sense of holes in the ozone layer combining or reinforcing one another would not occur (USAF 2000).

Rocket launches result in the emission of greenhouse gases ($CO_2$, trace emissions of $NO_X$ emitted by the SRBs, and water vapor). The exhaust cloud would also contain CO, most of which, under the high temperatures of the SRB's exhaust, would quickly react with oxygen in the atmosphere to form $CO_2$. Emissions from expendable launch vehicles have been previously estimated (USAF 1998, USAF 2000). These estimates indicate that the annual exhaust emissions from all launch vehicles analyzed would be a very small fraction (on the order of $10^{-5}$ percent) compared to the net greenhouse gases emitted by the United States in 2004 of approximately $6.3 \times 10^{12}$ kg ($1.4 \times 10^{13}$ lb) measured as carbon dioxide equivalent (EPA 2006f). Since the MSL mission would not increase the previously analyzed launch rates, launch of the mission would not be anticipated to contribute further to the accumulation of greenhouse gases from expendable launch vehicles.

Other activities on or near CCAFS that are not connected with the MSL mission that could occur during this timeframe includes the proposed development and construction of the KSC Exploration Park (KEP) (formerly the International Space Research Park (ISRP)) located on 160 hectares (400 acres) of KSC. These and other potential construction activities at and in the vicinity of CCAFS could potentially contribute to increases in noise, particulates and dust, solid waste disposal, and the potential for involving wetlands and endangered species. An EIS for the ISRP has been prepared (NASA 2004c). It is anticipated that, should NASA approve this project, phased construction would occur over the next 20 to 25 years.

No cumulative impacts would occur under the No Action Alternative.

## 4.5 ENVIRONMENTAL EFFECTS THAT CANNOT BE AVOIDED

At lift-off and during ascent, the main engine and SRBs of the Atlas V, if that vehicle is selected for the MSL mission, would produce $Al_2O_3$, CO, HCl, and relatively smaller amounts of $CO_2$, $NO_X$, hydrogen, nitrogen, chlorine and water. The main engines of the Delta IV, if that vehicle is selected for the MSL mission, would produce primarily water vapor and water. The exhaust cloud would be concentrated near the launch pad during the first moments of launch. Thereafter, the exhaust cloud would be transported downwind and upward, eventually dissipating to background concentrations.

Biota in the immediate vicinity of either the Atlas V launch pad at SLC-41 or the Delta IV launch pad at SLC-37 could be damaged or killed by the intense heat and HCl

deposition (at SLC-41) from the exhaust cloud. No long-term adverse effects to biota would be anticipated. $Al_2O_3$ particulates from the Atlas V SRBs would also be deposited on soils and nearby surface waters at the launch site as the exhaust cloud travels downwind.

## 4.6 INCOMPLETE OR UNAVAILABLE INFORMATION

This DEIS has been developed before final preparations would be completed for the proposed MSL mission. The final mission and spacecraft designs would be subject to refinement and modification as the detailed mission planning and spacecraft design processes proceed. The results of this development process are not anticipated to substantively affect the environmental evaluations presented in this DEIS. However, should substantial change occur in the environmental impact analyses, NASA would evaluate the need for additional environmental documentation.

The risk assessment for the MSL mission prepared by DOE evaluates postulated launch accidents that could potentially result in a release of $PuO_2$ from the MMRTG. DOE's risk assessment has made use of the results of risk analyses for previous NASA missions. The results from these prior missions have been scaled and combined with additional analysis to develop risk estimates for the MSL mission.

Several technical issues that could impact the results presented in this DEIS would undergo continuing evaluation as a part of a more detailed safety analysis should NASA proceed with the Proposed Action (Alternative 1). Issues that continue to be evaluated include:

- the solid propellant fire environment and its potential effect on the release of $PuO_2$ from the MMRTG;
- the behavior of solid $PuO_2$ and $PuO_2$ vapor in the fire environment and the potential for $PuO_2$ vapor to permeate the graphite components in the MMRTG; and,
- the mechanical response of the MMRTG for the mission-specific configuration of the MSL mission.

Under Presidential Directive/National Security Council Memorandum 25 (PD/NSC-25), a separate nuclear launch safety review of the MSL mission would be conducted by NASA and DOE should NASA proceed with the Proposed Action. As part of this process, DOE would prepare a Final Safety Analysis Report (FSAR) that would include a complete, detailed risk analysis. In preparing the FSAR, DOE would follow procedures and use techniques similar to those used in the risk analyses performed for earlier NASA missions using radioisotope devices. An Interagency Nuclear Safety Review Panel (INSRP) would be formed for the MSL mission, and would review this safety analysis. Should the FSAR present risk estimates that differ significantly from those presented in this EIS, NASA would consider the new information, and determine the need for additional environmental documentation.

A detailed uncertainty analysis has not been performed as part of the risk assessment prepared for this DEIS. Based on uncertainty analyses performed for previous mission

risk assessments (*e.g.*, NASA 1997), parameter and model uncertainties associated with estimating radiological consequences could result in risk estimates that vary from one to two orders of magnitude at the 5 percent and 95 percent confidence levels. The FSAR would include the results of a formal uncertainty analysis based on the MSL risk analysis.

## 4.7 RELATIONSHIP BETWEEN SHORT-TERM USES OF THE HUMAN ENVIRONMENT AND THE MAINTENANCE AND ENHANCEMENT OF LONG-TERM PRODUCTIVITY

### 4.7.1 Short-Term Uses

Under either the Proposed Action (Alternative 1) or Alternative 2, the MSL mission would be launched from CCAFS. The short-term affected environment would include the launch complex and surrounding areas. At CCAFS, short-term uses include commercial, NASA and USAF operations, urban communities, a fish and wildlife refuge, citrus groves, residential communities, and recreational areas. The proposed MSL mission would be conducted in accordance with past and ongoing NASA and USAF procedures for operations at CCAFS. Should an accident occur under the Proposed Action causing a radiological release, short-term uses of contaminated areas could be curtailed, pending mitigation.

### 4.7.2 Long-Term Productivity

No change to land use at CCAFS and the surrounding region is anticipated due to either the Proposed Action (Alternative 1) or Alternative 2. The region would continue to support human habitation and activities, wildlife habitats, citrus groves, grazing and agricultural land, and cultural, historic and archaeological areas. No long-term effects on these uses are anticipated because of either Alternative. However, should an accident occur under the Proposed Action causing a radiological release, the long-term productivity of contaminated land areas could be impacted, pending mitigation.

The successful completion of the proposed MSL mission would benefit science and the United States space program, which is important to the economic stability of the area. In addition to the localized economic benefits from the proactive small and small disadvantaged business plan, implementing this mission has broader socioeconomic benefits. These include technology spin-offs, such as low power digital receivers, to industry and other space missions, maintaining the unique capability of the United States to conduct complex planetary missions by a large number of scientists and engineers, and supporting the continued scientific development of graduate students in a number of universities and colleges. Furthermore, comprehensive formal and informal education programs would be conducted as education and public outreach efforts, and proactive small business plans would be available to provide opportunities for small, small disadvantaged, and woman-owned small businesses, and historically black colleges and universities. Data and images acquired by the MSL mission would be made available to the general public, schools, and other institutions via a broad variety of media, including the Internet.

## 4.8 IRREVERSIBLE AND IRRETRIEVABLE COMMITMENT OF RESOURCES

An irretrievable resource commitment results when a spent resource cannot be replaced within a reasonable period of time. For both the Proposed Action (Alternative 1) and Alternative 2, quantities of various resources, including energy, fuels, and other materials, would be irreversibly and irretrievably committed. The use of these resources would be associated with the fabrication, launch, and operation of the proposed MSL mission.

### 4.8.1 Energy and Fuels

Fabrication of the MSL spacecraft and its launch vehicle would use electrical and fossil-fuel energy. This use constitutes an irretrievable commitment of resources but would not impose any significant energy impacts. The launch and operation of the spacecraft would consume solid and liquid propellant and related fluids. The solid propellant ingredients for the Atlas V SRBs would be ammonium perchlorate, aluminum powder, and HTPB binder. The liquid propellants would include RP-1 (for the Atlas V), hydrazine, $LH_2$, and $LO_2$. Typical quantities that would be used are summarized in Section 2.1.5.

### 4.8.2 Other Materials

The total quantities of other materials used in the proposed MSL mission that would be irreversibly and irretrievable committed are relatively minor. Typically, these materials include steel, aluminum, titanium, iron, molybdenum, plastic, glass, graphite, nickel, chromium, lead, zinc, and copper. Less common materials may include small quantities of silver, mercury, gold, rhodium, gallium, germanium, hafnium, niobium, platinum, iridium, tantalum, and beryllium and plutonium (for the Proposed Action (Alternative 1)).

## 4.9 ENVIRONMENTAL COMPLIANCE AT CCAFS AND KSC

This section presents an overview of environmental laws, regulations, reviews and consultation requirements applicable to operations at CCAFS, and includes permits, licenses, and approvals. The information presented is summarized from the *Final Environmental Impact Statement for the Evolved Expendable Launch Vehicle Program* (USAF 1998), the *Final Supplemental Environmental Impact Statement for the Evolved Expendable Launch Vehicle Program* (USAF 2000), and NASA's *Final Environmental Assessment for Launch of NASA Routine Payloads on Expendable Launch Vehicles from Cape Canaveral Air Force Station, Florida and Vandenberg Air Force Base, California* (NASA 2002). The referenced documents present the relevant discussions, analyses, potential environmental impacts and applicable mitigation plans within each topic of concern. Launch of the MSL mission from CCAFS would follow all applicable requirements, and no new permits, licenses, or approvals would be required.

Air Resources

Air permits are required for activities considered as stationary sources having the potential to release air pollutants such as launch support activities (*e.g.*, vehicle preparation, assembly, propellant loading), but are not required for emissions from

mobile sources such as launch vehicles during liftoff and ascent. Existing equipment and services would be used.

CCAFS currently operates under Title V (40 CFR 70) of the Clean Air Act of 1955, as amended (42 U.S.C. 7401 *et seq.*), as a single facility. Commercial launch service providers are required to obtain Title V permits for their operations.

Water Resources

The Clean Water Act of 1977, as amended (33 U.S.C. 1251 *et seq.*), provides regulatory guidelines for water quality.

Wastewater at CCAFS is discharged in accordance with the National Pollutant Discharge Elimination System permit conditions. Water used during launch would be discharged under a Florida Department of Environmental Protection permit or disposed by a certified contractor.

Floodplains and Wetlands

Executive Order (EO) 11988, *Floodplain Management*, and EO 11990, *Protection of Wetlands*, would be followed. No added impacts to floodplains and wetlands beyond those normally associated with typical launches would be anticipated. The proposed MSL launch would not be anticipated to add substantial impacts beyond those normally associated with any Atlas or Delta launch.

Hazardous Material Management

Hazardous materials are regulated under Federal laws such as the Comprehensive Environmental Response, Compensation, and Liability Act of 1980, as amended (42 U.S.C. 9601 *et seq.*), the Toxic Substances Control Act of 1986, as amended (15 U.S.C. 2601 *et seq.*), and the Hazardous Material Transportation Act of 1970, as amended (49 U.S.C. 1803 *et seq.*). Air Force Instruction AFI 32-7086, *Hazardous Material Management*, provides guidance for managing hazardous materials.

Hazardous material would be procured and managed by the commercial launch service provider. The 45th Space Wing Operations Plan 32-3, *Hazardous Material Response Plan*, provides guidance for hazardous material spills.

Hazardous Waste Management

The Resource Conservation and Recovery Act of 1976, as amended (42 U.S.C. 6901 *et seq.*), corresponding state law, and associated Federal and state regulations establish regulatory requirements for managing hazardous wastes. Air Force Instruction AFI 32-7042, *Solid and Hazardous Waste Compliance*, provides guidance on managing hazardous waste. Hazardous wastes must be collected, labeled appropriately, and stored in hazardous waste collection areas prior to disposal.

Hazardous wastes would be managed by the commercial launch service provider or by NASA. The 45th Space Wing Operations Plan 19-14, *Petroleum Products and Hazardous Waste Management Plan* would be followed.

Pollution Prevention

The Pollution Prevention Act of 1990, as amended (42 U.S.C. 13101 *et seq.*), provides the regulatory framework. Department of Defense Directive 4210.15, *Hazardous Material Pollution Prevention*; USAF Policy Directive AFPD 32-70, *Environmental Quality*; and USAF Instruction AFI 32-7080, *Pollution Prevention Program*, provide pollution prevention guidelines. NASA participates in a partnership with the military services called the Joint Group on Pollution Prevention to reduce or eliminate hazardous material or processes.

Pollution prevention guidelines are provided by the 45th Space Wing *Pollution Prevention Program Guide and Pollution Prevention Management Action Plan*.

Spill Prevention

Hazardous material spills are addressed under the 45th Space Wing Operations Plan 32-3, *Hazardous Materials Response Plan*. The commercial launch service provider will, in most cases, be responsible for clean-up of any released hazardous material. When a spill of a Federally-listed oil or petroleum occurs, as per the 45th Space Wing Operations Plan 19-4, *Hazardous Substance Pollution Contingency Plan*, the substance is collected and removed for disposal by a certified contractor.

Biological Resources

Federal mandates for the conservation of biological resources include, but are not limited to, the Endangered Species Act of 1973, as amended (16 U.S.C. 1531 *et seq.*) (ESA), the Marine Mammal Protection Act of 1972, as amended (16 U.S.C. 1361 *et seq.*), and the Migratory Bird Treaty Act of 1918, as amended (16 U.S.C. 703 *et seq.*), CCAFS has ESA-listed (endangered or threatened) species. USAF consultations with the U.S. Fish and Wildlife Service and the National Marine Fisheries Service are in place or in process. Established standard practices (*e.g.*, complying with the light management plan for nesting sea turtles and hatchlings) would be observed to minimize impacts to these resources.

Coastal Zone Management

The regulatory framework for coastal zone management is provided by the Federal Coastal Zone Management Act of 1972, as amended (16 U.S.C. 1451 *et seq.*), which establishes a national policy to preserve, protect, develop, restore, and enhance the resources of the nation's coastal zone. CCAFS would follow the State of Florida's requirements. No added impacts beyond those normally associated with launches would be anticipated.

Cultural Resources

Directives of Section 106 of the National Historic Preservation Act of 1966, as amended (16 U.S.C. 470 *et seq.*), would be followed. The State Historic Preservation Officer and the Federal Advisory Council on Historic Preservation would be consulted, if the USAF believes that the MSL mission might adversely affect cultural resources, although no such adverse effects are anticipated at this time.

Noise

Regulations and guidelines prescribed by the Noise Control Act of 1972, as amended (42 U.S.C. 4901 *et seq.*), the Occupational Safety and Health Administration, and the National Institute of Occupational Safety and Health would be followed.

Worker and Public Safety and Health

OSHA regulations would be followed to ensure worker and public safety and health from excessive noise, exposure to hazardous materials and hazardous wastes, and ingestion of toxic fumes from operations such as fueling. The 45th Space Wing at CCAFS has the responsibility to follow Range Safety guidelines as outlined in the *Range Safety User Requirements Manual* (USAF 2004). MMRTG handling at the launch site would be performed following applicable regulations as outlined in KHB 1860.1, *KSC Ionizing Radiation Protection Program* (NASA 2001) and DOE ground processing requirements.

This page intentionally left blank.

# 5 LIST OF PREPARERS

This Draft Environmental Impact Statement (DEIS) for the Mars Science Laboratory (MSL) mission was prepared by the Science Mission Directorate, National Aeronautics and Space Administration (NASA). As a cooperating agency, the U.S. Department of Energy (DOE) has contributed expertise in the preparation of this DEIS. The organizations and individuals listed below contributed to the overall effort in the preparation of this document.

National Aeronautics and Space Administration

| | |
|---|---|
| Mark Dahl<br>*B.S., Electrical Engineering*<br>Years of Experience: 31 | Program Executive, Mars Science Laboratory Mission |
| Kenneth Kumor<br>*J.D.*<br>Years of Experience: 25 | NASA NEPA Coordinator |
| Tina Norwood<br>*M.S., Ecology*<br>Years of Experience: 20 | Environmental Specialist |
| John Giles<br>*B.S., Electrical and Mechanical Engineering*<br>Years of Experience: 17 | Launch Approval Engineering Lead |
| Thomas Shemanski<br>*M.S., Aerospace Systems*<br>Years of Experience: 34 | Reliability and Launch Approval Engineer |
| Robert Freeman<br>*M.S, Aeronautical Sciences*<br>Years of Experience: 20 | Launch Approval Engineer |

Science Applications International Corporation (Contractor to NASA)

| | |
|---|---|
| Lawrence DeFillipo<br>*B.E., Engineering Sciences*<br>Years of Experience: 26 | EIS Program Manager |
| Daniel Spadoni<br>*MBA*<br>Years of Experience: 37 | EIS Project Manager |
| Suzanne Crede<br>*B.S., Chemistry Education*<br>Years of Experience: 16 | Environmental Analyst |

| | |
|---|---|
| Daniel Czelusniak<br>*J.D.*<br>Years of Experience: 6 | Environmental Scientist |
| Dennis Ford<br>*PhD, Zoology*<br>Years of Experience: 34 | NEPA Coordinator |
| Daniel Gallagher<br>*M.E., Nuclear Engineering*<br>Years of Experience: 26 | Reliability and Risk Engineer |
| Jorge McPherson<br>*B.S. Chemical Engineering*<br>Years of Experience: 19 | Environmental Specialist |
| Douglas Outlaw<br>*PhD, Nuclear Engineering*<br>Years of Experience: 36 | Senior Environmental Scientist |
| Tammy Way<br>*B.A., Political Science*<br>Years of Experience: 17 | Public Outreach Coordinator |
| Lasantha Wedande<br>*M.S. Environmental Management*<br>Years of Experience: 13 | Environmental Scientist |

California Institute of Technology - Jet Propulsion Laboratory (Contractor to NASA)

| | |
|---|---|
| Reed Wilcox<br>*M.S., City and Regional Planning*<br>Years of Experience: 20 | Manager, Cross-Program Launch Approval Engineering |
| J. Mark Phillips<br>*B.S., Biology*<br>Years of Experience: 25 | Manager, Mars Exploration Program Launch Approval |
| Jonathan Stabb<br>*M.A. Mathematics*<br>Years of Experience: 15 | Launch Approval Engineer |
| David Woerner<br>*B.S. Aerospace Engineering*<br>Years of Experience: 25 | Launch Services and MMRTG Office Manager |
| Paul Van Damme<br>*M.S., Public Policy*<br>Years of Experience: 14 | Deputy Manager, Launch Approval Engineering |

U.S. Department of Energy

Lyle Rutger — Team Leader: Nuclear Engineer
*M.S., Nuclear Engineering*
Years of Experience: 29

Tetra Tech NUS

Bart Bartram — Project Manager, Senior Scientist
*M.S., Mechanical Engineering/Physics*
Years of Experience: 34

This page intentionally left blank.

# 6 AGENCIES, ORGANIZATIONS AND INDIVIDUALS CONSULTED

This Draft Environmental Impact Statement (DEIS) for the Mars Science Laboratory (MSL) is available for review and comment by Federal, State, and local agencies and the public. The public review and comment period will close 45 days from the publication of the U.S. Environmental Protection Agency's (EPA) *Federal Register* notice of availability (NOA) or NASA's NOA, whichever is later. Timely comments will be considered during the preparation of the Final EIS. NASA has mailed copies of the DEIS directly to the agencies, organizations, and individuals, as listed below, who may have interest in environmental impacts and alternatives associated with the MSL mission.

**Federal Agencies**

Council on Environmental Quality
National Science Foundation
Office of Management and Budget
U.S. Department of Agriculture
U.S. Department of the Air Force
U.S. Department of Commerce
    National Oceanic and Atmospheric Administration
    National Marine Fisheries Service (NOAA Fisheries)
U.S. Department of Health and Human Services
    Centers for Disease Control and Prevention
    National Cancer Institute
U.S. Department of Homeland Security
    Federal Emergency Management Agency
    U.S. Coast Guard
U.S. Department of the Interior
    Fish and Wildlife Service
    National Park Service
U.S. Department of State
U.S. Department of Transportation
    Federal Aviation Administration
    Research and Special Programs Administration
U.S. Environmental Protection Agency
U.S. Nuclear Regulatory Commission

**State Agencies**

State of Florida, Office of Governor
Florida State Clearinghouse
East Central Florida Regional Planning Council

**County Agencies**

Brevard County
    Board of County Commissioners

Natural Resources Management Office
Office of Emergency Management
Planning and Zoning Office
Public Safety Department
Lake County
Orange County
Osceola County
Seminole County
Volusia County

**Local Agencies**

Canaveral Port Authority
City of Cape Canaveral
City of Cocoa
City of Cocoa Beach
City of Kissimmee
City of Melbourne
City of New Smyrna Beach
City of Orlando
City of West Melbourne
City of St. Cloud
City of Titusville

**Organizations**

The American Association for the Advancement of Science
American Astronomical Society
American Institute of Aeronautics and Astronautics
American Society of Mechanical Engineers
Audubon of Florida
Economic Development Commission of Florida's Space Coast
Environmental Defense Fund
Environmental Defense Institute, Inc.
Federation of American Scientists
Friends of the Earth
Global Network Against Weapons and Nuclear Power in Space
Greenpeace
Indian River Audubon Society
Mars Society
National Space Society
National Wildlife Federation
Natural Resources Defense Council
The Planetary Society
Sierra Club
Union of Concerned Scientists

### Individuals

No individuals submitted scoping comments in response to NASA's Notice of Intent, published March 10, 2006 in the *Federal Register* (71 FR 12402), to prepare an EIS and conduct scoping for the MSL mission.

This page intentionally left blank.

# 7 INDEX


**A**

Abbreviations, xxi

Accident

- cleanup costs, ix, 2-46, 4-30
- configurations, 4-13, 4-17
- consequences, viii, ix, 2-39, 2-41, 4-9, 4-24
- environments, viii, 2-19, 2-41, 4-12, 4-19
- probabilities, viii, ix, 2-42, 4-15

Acronyms, xxi

Affected Environment, 3-1

Agencies and Individuals Consulted, 5-1

Air quality, vii, 2-37–9, 3-4, 4-4, 4-11

Alternatives

- Alternative 1 (see Proposed Action)
- Alternative 2, vi, 2-30, 4-36
- considered but not evaluated further, 2-34
- comparison of, xii, 2-36, 2-47
- No Action, vi, 2-34, 4-37
- Proposed Action, vi, 2-1, 4-1

Aluminum oxide ($Al_2O_3$), 2-37–9, 4-4, 4-10–11, 4-42

Ambient noise, 3-5

Ammonium perchlorate, 2-11, 3-6, 4-4, 4-10–11, 4-42

Aquatic preserves, 3-5

Aquatic resources, 3-7

Archaeological resources, 2-39, 2-45, 3-10–11, 4-7, 4-41

Atlas V, 2-20

Atomic Energy Act, 4-31

Automatic Destruct System (ADS), 2-28, 4-16

**B**

Background radiation, 3-14

Benefits of mission, 4-41

Biological resources, 2-38, 3-6, 4-6, 4-44

**C**

Cancer fatalities (see Latent cancer fatalities)

Cape Canaveral Air Force Station (CCAFS), vi, viii, 1-1, 1-5, 2-1, 2-19, 3-1, 4-1

Carbon dioxide ($CO_2$), 2-37, 2-40, 4-4, 4-8, 4-10, 4-39

Carbon monoxide (CO), 2-37, 2-40, 4-4, 4-10

Centaur (see Second stage)

Centaur Automatic Destruct System (CADS), 2-28

Clean Air Act, 3-5, 4-42

Clean Water Act, 4-43

Cleanup of contaminated areas, ix, 2-46, 4-30

Climate

- global, 2-38, 4-8
- regional, 3-3

Collective dose, xi, 2-43, 4-24

Command Destruct System (CDS), 2-28, 4-15, 4-17

Consultations with agencies and individuals, 5-1

Contributors, 6-1

Council on Environmental Quality (CEQ), v, 1-1, 3-8

Critical habitat, 2-38, 4-6, 4-41

Cultural resources, 2-39, 2-45, 3-10, 4-7, 4-41, 4-44

Cumulative impacts, vii, 2-38–39, 4-38

**D**

Debris

- launch accident, viii, xi, 2-40, 2-42, 4-10–11, 4-15, 4-21

- normal launch, 3-10, 4-7–8
- orbital and reentry, 4-8

Delta IV, 2-24

Dose
- average background, 2-44, 3-14, 4-27
- collective, xi, 2-43, 4-24
- general, 3-14
- maximum individual, ix, x, 2-43, 4-24

**E**

Economic impacts, ix, 2-46, 4-30

Electromagnetic radiation, 2-29

Emergency response planning, 2-29, 4-35

Emergency services, 3-10

Endangered species, 1-5, 2-38, 3-7, 4-6, 4-39

Environmental impacts
- normal launch, vii, 2-37, 4-3, 4-37
- nonradiological accidents, vii, 2-37, 4-9, 4-37
- preparing for launch, 2-39, 4-3, 4-37
- radiological accidents, viii, 2-40, 4-11

Environmental justice, 4-7, C-1

Essential fish habitat, 3-7, 4-11

Exhaust emissions (see Launch emissions)

**F**

Final Safety Analysis Report (FSAR), viii, 4-12

First stage, 2-21, 2-25

Flight Termination System (FTS), 2-27, 4-16, 4-23, 4-27, 4-29

Floodplain, 3-5, 4-43

Florida scrub jay, 3-7, 4-6

**G**

General Purpose Heat Source (GPHS), 2-14, 2-18, 2-44, 4-12, 4-14, 4-19, 4-21

Global environment, 3-11

Global climate change, 2-38, 4-8

Glossary, A-1

Greenhouse gases, 4-8, 4-39

Groundwater, 2-38, 3-5–6

**H**

Health effects, 2-43–46, 4-15, 4-24–34

Historical resources, 2-38, 3-10, 4-7

Hydrazine, 2-10, 2-19–26, 2-39, 4-9, 4-11, 4-42

Hydrogen chloride (HCl), vii, 2-37–40, 4-4–7, 4-10–11, 4-39

Hydrology, 2-38, 3-5, 4-5

hydroxyl-terminated polybutadiene binder (HTPB), 2-21, 4-4, 4-42

**I**

Incomplete or unavailable information, 4-40

Interagency Nuclear Safety Review Panel (INSRP), 4-40

**K**

Kennedy Space Center (KSC), 2-19, 2-26, 2-30, 3-1, 4-3

**L**

Land use, 2-38, 2-46, 3-1, 4-4, 4-31, 4-38, 4-41

Latent cancer fatalities, (see also Health effects) ix–xi, 2-43–45, 4-15

Launch emissions, vii, 2-37, 3-11, 4-4, 4-38–39

Launch phases (see Mission phases)

Launch profile, 2-23, 2-26

Launch vehicle processing, 2-22, 2-26, 4-3

Launch vehicles
- Atlas V, 2-20

– Delta IV, 2-24
Lightning, 2-29
Liquid propellant, vii, 2-20, 2-23–28, 2-37–40, 4-3–4, 4-9–10, 4-18–20, 4-42
Liquid hydrogen ($LH_2$), 2-21, 2-23, 2-25–26, 2-37–39, 4-4, 4-9–10, 4-42
Liquid oxygen ($LO_2$) , 2-21, 2-23, 2-25–26, 2-37–39, 4-4, 4-9–10, 4-42

**M**

Manatee, 3-7
Maximally exposed individual, x, 2-45, 2-47, 4-33
Maximum individual dose, ix, x, 2-43, 4-24
Mission Flight Control Officer (MFCO), 4-17
Mission
– description, v, 2-3, 2-30
– objectives, 1-2
– phases, ix, 2-42–46, 4-15–16, 4-20–34
– risk, 2-35, 2-37, 2-40–41, 2-45, 4-9, 4-13–15, 4-31–33
Multi-Mission Radioisotope Thermoelectric Generator (MMRTG), viii, 2-14

**N**

National Ambient Air Quality Standards (NAAQS), 3-4, 4-4
National Environmental Policy Act (NEPA), v, 1-1, 1-4, 3-1
Nitrogen dioxide ($NO_2$), 3-4
Nitrogen oxides ($NO_X$), 2-37–39, 4-4, 4-39
No Action Alternative, vi, 2-34, 4-37
Noise, 2-38, 4-5–6, 4-38–39, 4-44
Notice of Intent, 1-5

**O**

Offshore environment, 3-6, 4-6
Outstanding Florida Waters, 3-5
Ozone ($O_3$), vii, 2-38–39, 3-4, 3-11, 4-8, 4-38–39

**P**

Particulates, 3-4, 3-11
Payload fairing (PLF), 2-19, 2-20, 2-25
Perchlorate contamination, 3-6, 4-10
Plutonium
– environmental effects, B-1
– worldwide levels, 3-14
Plutonium (Pu)-238, viii, 2-15
Plutonium dioxide ($PuO_2$), viii–xi, 2-14, 2-17, 2-39–42, 2-44, 4-2, 4-9–16
Population
– global, 3-12
– regional, 3-7
– risk, 2-47
Price-Anderson Act, 2-46, 4-31
Proposed Action
– description, 2-1
– need, 1-3
– purpose, 1-3
Purpose and Need for Action, 1-1

**R**

Range Safety, viii, 2-28, 3-10, 4-7, 4-10, 4-45
References, 8-1
Regional environment, 3-1–11
Risk
– average individual, 2-47, 4-33
– general, 2-47, 4-31
– mission, 2-31, 2-46, 4-9, 4-13–15, 4-31–33
– population, 2-47
Rocket Propellant (RP-1), 2-21, 2-23, 2-36, 2-39, 4-4, 4-9, 4-11, 4-42

**S**

Safety
– public, 2-40, 4-45

- Range (see Range Safety)
- worker, 2-40, 4-45

Science instruments, 2-11
Science objectives, 1-3
Second stage, 2-21, 2-25
Socioeconomics, 2-38, 3-7, 4-6, 4-41
Solid propellant, 2-21, 2-38, 2-40, 2-45, 4-4, 4-6, 4-10, 4-13–15, 4-18, 4-20–21, 4-25, 4-27–29, 4-40, 4-42
Solar power, 2-30–34
Solid rocket booster (SRB), vii, 2-20, 2-23, 2-37–40, 4-4–8, 4-10–11, 4-16, 4-20, 4-38–39, 4-42
Sonic booms, 2-38
Source term, ix, 2-41, 4-12–15, 4-19, 4-21
Spacecraft description, 2-9, 2-30
Spacecraft processing, 2-19
Space Launch Complex (SLC)-37, 2-25
Space Launch Complex (SLC)-41, 2-22
Stage 1 (see First stage)
Stage 2 (see Second stage)
Stratospheric ozone, 3-11
Surface water, 3-5

**T**

Terrestrial resources, 3-6
Threatened and endangered species, 1-5, 2-38, 3-7, 4-6, 4-44
Toxic gases, (see also Launch emissions) viii, 2-28, 4-7, 4-10, 4-45
Turtles, 3-7, 4-6, 4-44

**U**

Uncertainty, 4-18, 4-34, 4-40
Upper atmospheric impacts
- stratosphere, vii, 2-39, 4-38
- troposphere, 4-30

**W**

Water
- currents, 3-6
- groundwater, 2-38, 3-5–6
- quality, 2-39, 3-5–6, 4-6, 4-43
- surface, 3-5

Wetlands, 2-45, 3-2, 3-5–6, 4-29, 4-39, 4-43

# 8 REFERENCES

AEC 1974. U.S. Atomic Energy Commission. *Plutonium and Other Transuranium Elements, Sources, Environmental Distribution and Biomedical Effects.* USAEC WASH 1359. December 1974.

AIAA 1991. American Institute of Aeronautics and Astronautics. *Atmospheric Effects of Chemical Rocket Propulsion.* Report of an AIAA Workshop, Sacramento, California. 1991.

ASCA 2006. ASCA, Inc. *Mars Science Laboratory Launch Accident Probability Data For EIS Risk Assessment.* AR 06-02. February 24, 2006.

BCBCC 2003. Brevard County Board of County Commissioners. Natural Resources Management Office. *Threatened and Endangered Plants in Brevard*. June 2003. Available at http://www.brevardcounty.us/environmental_management/plants_threatened_endangered.cfm.

BEA 2004. Bureau of Economic Analysis. *Comprehensive Revision of Gross State Product (GSP), 1977-2002 and Accelerated GSP Estimates for 2003.* December 2004. Available at http://www.bea.gov/bea/newsrel/GSPNewsRelease.htm.

BEBR 2004. Bureau of Economic and Business Research. *Florida Statistical Abstract 2001.* Warrington College of Business Administration, University of Florida. Gainesville, Florida. 2004.

Boeing 2002. The Boeing Company. *Delta IV Payload Planners Guide.* MDC 00H0043. October 2000, updated April 2002. Available at http://www.boeing.com/defense-space/space/delta/delta4/guides.htm.

BLS 2000. U.S. Bureau of Labor Statistics. *Fatal Occupational Injuries by Industry and Event or Exposure, 2000.* Available at http://www.bls.gov/iif/oshcfoi1.htm.

Chambers 2005. Personal communication from A.L. Chambers, Environmental Planning and Conservation, 45 CES/CEVP, Patrick Air Force Base, Florida, to L. Wedande, Science Applications International Corporation. Regarding groundwater sampling for perchlorate. June 22, 2005.

Chanin et al. 1996. Chanin D.I. and W.B. Murfin. *Site Restoration: Estimation of Attributable Costs From Plutonium-Dispersal Accidents*. Prepared for Transportation Systems Analysis Department, Sandia National Laboratories. Albuquerque, NM. May 1996.

CEQ 1997. Council on Environmental Quality. *Environmental Justice: Guidance under the National Environmental Policy Act*. Executive Office of the President, Washington, DC. December 10, 1997. Available at http://ceq.eh.doe.gov/nepa/regs/guidance.html.

DHS 2004. U.S. Department of Homeland Security. *National Response Plan*. Washington, DC. December 2004. Available at http://www.dhs.gov/dhspublic/display?theme=14.

DOE 2006a. U.S. Department of Energy. *Nuclear Risk Assessment for the Mars Science Laboratory Mission Environmental Impact Statement*. Prepared by Tetra Tech NUS, Inc. for the Office of Space and Defense Power Systems, U.S. Department of Energy. July 21, 2006.

DOE 2006b. U.S. Department of Energy. *Additional Information in Support of the Mars Science Laboratory Mission Draft Environmental Impact Statement*. Prepared by Tetra Tech NUS, Inc. for the Office of Space and Defense Power Systems, U.S. Department of Energy. July 25, 2006.

EDR 2005. Office of Economic and Demographic Research. The Florida Legislature. *Data from the Demographic Estimating Conference Database (Updated March 2005).* Available at http://www.state.fl.us/edr/population.htm.

EPA 2003. U.S. Environmental Protection Agency. *National Air Quality and Emissions Trends Report, 2003 Special Studies Edition.* Document Number EPA 454/R-03-005. Office of Air Quality and Standards, Air Quality and Standards Division, Research Triangle Park, North Carolina. September 2003. Available at http://www.epa.gov/airtrends/reports.html.

EPA 2006a. U.S. Environmental Protection Agency. *Fine Particle (PM 2.5) Designations. Final Designations*. Available at http://www.epa.gov/pmdesignations/statedesig.htm.

EPA 2006b. U.S. Environmental Protection Agency. *National Ambient Air Quality Standards*. Available at http://www.epa.gov/air/criteria.html.

EPA 2006c. U.S. Environmental Protection Agency. *National Estuary Program*. Available at http://www.epa.gov/owow/estuaries/.

EPA 2006d. U.S. Environmental Protection Agency. *Contaminant Focus, Perchlorate*. Available at http://clu-in.org/contaminantfocus/default.focus/sec/perchlorate/cat/Envionmental_Occurrence/.

EPA 2006e. U.S. Environmental Protection Agency. *Unregulated Contaminant Monitoring Rule (UCMR) 1999.* Available at http://www.epa.gov/safewater/ucmr.html.

EPA 2006f. U.S. Environmental Protection Agency. *Inventory of U.S. Greenhouse Gas Emissions and Sinks: 1990-2004.* Document Number EPA 430-R-06-002. Washington, DC. April 15, 2006. Available at http://yosemite.epa.gov/oar/globalwarming.nsf/content/emissions.html.

FAC 62-204.240. Florida Administrative Code, Chapter 62, Department of Environmental Protection, Section 62-204 *Air Pollution Control - General Provisions*, Rule 62 204.240, *Ambient Air Quality Standards*. State of Florida. Available at http://fac.dos.state.fl.us/.

FDACS 2006. Florida Department of Agriculture & Consumer Services. Division of Forestry, Forest Management. *Florida Statewide Endangered and Threatened Plant Conservation Program.* Available at http://www.fl-dof.com/forest_management/plant_conservation_index.html.

FDEP 2002. Florida Department of Environmental Protection, State of Florida. *Title V Operating Permits*. Available at http://www.dep.state.fl.us/Air/eproducts/ards/ListPermits.asp.

FDEP 2004. Florida Department of Environmental Protection, State of Florida. *Florida Air Monitoring Report 2004*. Available at http://www.dep.state.fl.us/Air/publications/techrpt/amr.htm.

*Federal Register* (69 FR 21867) 2004. *Notice of intent to prepare a Tier I Environmental Impact Statement (EIS) and to conduct scoping for the development of advanced Radioisotope Power Systems.* National Aeronautics and Space Administration. April 22, 2004

*Federal Register* (70 FR 19102) 2005. *Notice of availability of final programmatic environmental impact statement (FPEIS) for implementation of the Mars Exploration Program (MEP)*. National Aeronautics and Space Administration. April 12, 2005.

*Federal Register* (71 FR 12402) 2006. *Notice of intent to conduct scoping and prepare an environmental impact statement for the Mars Science Laboratory mission.* National Aeronautics and Space Administration. March 10, 2006.

FFWCC 2006. Florida Fish and Wildlife Conservation Commission, State of Florida. *Florida's Imperiled Species.* Available at http://wildflorida.org/imperiled/.

Freeman 2006. Personal communication from R. Freeman, Kennedy Space Center, to D. Spadoni, Science Applications International Corporation. Regarding the Delta IV Heavy launch vehicle. March 16, 2006.

FS 258.501. The 2005 Florida Statutes. Title XVIII, *Public Lands and Properties*, Chapter 258, *State Parks and Preserves*, Part III, *Wild and Scenic Rivers*. State of Florida. Available at http://www.leg.state.fl.us/statutes/.

FWS 2006. U.S. Fish and Wildlife Service. *Species Information. Threatened and Endangered Animals and Plants.* Available at http://endangered.fws.gov/wildlife.html.

Gray *et al* 1995. Gray, J., S. Jones and A. Smith. "Discharges to the environment from the Sellafield site". *J. Radiol. Prot.* 15:2 99-131. June 1995.

HHS 2001. U.S. Department of Health and Human Services. *Deaths: Preliminary Data for 2000.* National Vital Statistics Reports, Volume 49, Number 12. October 9, 2001. Available at http://www.cdc.gov/nchs.

HNUS 1992. Halliburton NUS Environmental Corporation. *World Demographic Update Through 1990 for Space Nuclear System Analyses*. June 12,1992.

HPS 2004. The Health Physics Society. *Environmental & Background Radiation – General*. Available at http://hps.org/publicinformation/ate/q1044.html.

IAEA 2005a. International Atomic Energy Agency. *Environmental Consequences of the Chernobyl Accident and Their Remediation: Twenty Years of Experience, Working Material* (Working Material, Limited Distribution). Vienna, Austria. August 2005. Available at http://www.iaea.org/NewsCenter/Focus/Chernobyl/index.shtml.

IAEA 2005b. International Atomic Energy Agency. *Status and Trends in Spent Fuel Reprocessing*. IAEA-TECDOC-1467. Vienna, Austria. September 2005. Available at http://www-pub.iaea.org/MTCD/publications/PDF/te_1467_web.pdf.

ICRP 1979. International Commission on Radiological Protection. *Limits for Intakes of Radionuclides for Workers.* ICRP-30. Part 1. 1979.

ICRP 1990. International Commission on Radiological Protection. *1990 Recommendations of the International Commission on Radiological Protection.* ICRP-60. Volume 27. 1990.

ILS-LM 2004. International Launch Services, Inc. and Lockheed Martin Corporation. *Atlas Launch System Mission Planner's Guide*. Revision 10. November 2004. Available at http://www.ilslaunch.com/missionplanner/.

JPL 2006. Jet Propulsion Laboratory. *MSL Solar Feasibility Study.* JPL D-33463. Pasadena, CA. March 20, 2006.

MEPAG 2001. Mars Exploration Payload Analysis Group. *The Search for Evidence of Life on Mars.* July 2001. Available at http://mepag.jpl.nasa.gov/reports/index.html.

MEPAG 2003. Mars Exploration Payload Analysis Group. *Mars Exploration Strategy 2009 – 2020; Preliminary Report: A Study of Options for Future Exploration of Mars.* April 18, 2003. Available at http://mepag.jpl.nasa.gov/reports/index.html.

MEPAG 2006. Mars Exploration Payload Analysis Group. *Mars Scientific Goals, Objectives, Investigations, and Priorities: 2006.* February 10, 2006. Available at http://mepag.jpl.nasa.gov/reports/index.html.

NASA 1989. National Aeronautics and Space Administration. *Final Environmental Impact Statement for the Galileo Mission (Tier 2)*. Solar System Exploration Division, Office of Space Science and Applications, NASA Headquarters. Washington, DC May 1989.

NASA 1990. National Aeronautics and Space Administration. *Final Environmental Impact Statement for the Ulysses Mission (Tier 2).* Solar System Exploration Division, Office of Space Science and Applications, NASA Headquarters. Washington, DC June 1990.

NASA 1995. National Aeronautics and Space Administration. *Final Environmental Impact Statement for the Cassini Mission.* Solar System Exploration Division, Office of Space Science, NASA Headquarters, Washington, DC June 1995.

NASA 1997. National Aeronautics and Space Administration. *Final Supplemental Environmental Impact Statement for the Cassini Mission.* Mission and Payload Development Division, Office of Space Science, NASA Headquarters. Washington, DC June 1997.

NASA 1998. National Aeronautics and Space Administration. *Monitoring Direct Effects of Delta, Atlas, and Titan Launches from Cape Canaveral Air Station*. NASA/TM-1998-207912. June 1998.

NASA 2001. National Aeronautics and Space Administration. *KSC Ionizing Radiation Protection Program*. KHB 1860.1. Kennedy Space Center, Florida. August 2001.

NASA 2002. National Aeronautics and Space Administration. *Final Environmental Assessment for Launch of NASA Routine Payloads on Expendable Launch Vehicles from Cape Canaveral Air Force Station, Florida and Vandenberg Air Force Base, California*. Office of Space Science, NASA Headquarters, Washington, DC June 2002.

NASA 2003. National Aeronautics and Space Administration. *Environmental Resources Document, Kennedy Space Center.* KSC-DF-3080, Rev. D. Kennedy Space Center, Florida. August 2003.

NASA 2004a. National Aeronautics and Space Administration. *The Vision for Space Exploration*. NP-2004-01-334-HQ. NASA Headquarters, Washington, DC. February 2004. Available at http://www.nasa.gov/mission_pages/exploration/news/index.html.

NASA 2004b. National Aeronautics and Space Administration. *Announcement of Opportunity; Mars Science Laboratory Investigations.* NNH04ZSS001O. NASA Headquarters, Washington, DC. April 14, 2004.

NASA 2004c. National Aeronautics and Space Administration. *Final Environmental Impact Statement for the International Space Research Park at the John. F. Kennedy Space Center, Florida*. June 2004.

NASA 2005a. National Aeronautics and Space Administration. *Final Programmatic Environmental Impact Statement for the Mars Exploration Program*. Science Mission Directorate, NASA Headquarters, Washington, DC March 2005. Available at http://spacescience.nasa.gov/admin/pubs/mepeis/.

NASA 2005b. National Aeronautics and Space Administration. *Final Environmental Impact Statement for the New Horizons Mission.* Science Mission Directorate, NASA Headquarters, Washington, DC July 2005. Available at http://spacescience.nasa.gov/admin/pubs/plutoeis/.

NASA 2005c. National Aeronautics and Space Administration. *Draft Programmatic Environmental Impact Statement for the Development of Advanced Radioisotope Power Systems.* Science Mission Directorate, NASA Headquarters, Washington, DC December 2005. Available at http://spacescience.nasa.gov/admin/pubs/rps/.

NASA 2006. National Aeronautics and Space Administration. *Delta IV Heavy AIC/AOC Probability Data for Application to MSL DEIS Risk Assessment.* Kennedy Space Center, Florida. April 13, 2006.

NCRP 1987. National Council on Radiation Protection and Measurements. *Ionizing Radiation Exposure of the Population of the United States*. NCRP Report 93. September 1, 1987.

NOAA 1980. National Oceanic and Atmospheric Administration. *Delta Atlas—Eastern United States Coastal and Ocean Zones.* Washington, DC August 1980.

NOAA 2001. National Oceanic and Atmospheric Administration. *Summary of Natural Hazard Statistics for 2000 in the United States*. August 16, 2001.

NOAA 2006. National Oceanic and Atmospheric Administration. National Hurricane Center/Tropical Prediction Center. Glossary of NHC/TPC Terms. Available at http://www.nhc.noaa.gov/aboutgloss.shtml

NPS 2005. U.S. National Park Service. *Wild and Scenic Rivers by State.* Available at http://www.nps.gov/rivers/wildriverslist.html.

NPS 2006. U.S. National Park Service. *National Register of Historic Places, Florida Index*. Available at http://www.cr.nps.gov/nr/research/nris.htm.

OSPAR 2005. Oslo-Paris Convention for the Protection of the Marine Environment of the North-East Atlantic. *Liquid Discharges from Nuclear Installations in 2003.* London, England. 2005. Available at http://www.ospar.org/.

Schmalzer *et al.* 1998. Schmalzer, P.A., S.R. Boyle, P. Hall, D.M. Oddy, M.A. Hensley, E.D. Stolen, and B.W. Duncan. *Monitoring Direct Effects of Delta, Atlas, and Titan Launches from Cape Canaveral Air Station*. NASA Technical Memorandum 207912. June 1998.

SEDAC 2005. Socioeconomic Data and Applications Center. *Gridded Population of the World, version 3*. Center for International Earth Science Information Network of the Earth Institute, Columbia University, New York, NY. 2005. Available at http://sedac.ciesin.columbia.edu/gpw/.

SSB 1999. Space Studies Board. *A Scientific Rationale for Mobility in Planetary Environments.* The National Academies Press. Washington, DC 1999.

SSB 2002. Space Studies Board. *New Frontiers in the Solar System: An Integrated Exploration Strategy.* The National Academies Press. Washington, DC 2002.

SSB 2003. Space Studies Board. *Assessment of Mars Science and Mission Priorities*. The National Academies Press. Washington, DC 2003.

USAF 1996. U.S. Air Force. *Final Environmental Assessment for the Delta III Launch Vehicle Program, Cape Canaveral Air Station.* Prepared by McDonnell Douglas Aerospace Space and Defense Systems. April 1996.

USAF 1998. U.S. Air Force. *Final Environmental Impact Statement – Evolved Expendable Launch Vehicle Program.* HQ USAF/ILEVP, 1260 Air Force Pentagon, Washington, DC April 1998.

USAF 1999. U.S. Air Force. *Nuclear Safety Review and Launch Approval for Space or Missile Use of Radioactive Material and Nuclear Systems.* Air Force Instruction 91-110, March 18, 1994; 30th Space Wing, Supplement 1, January 18, 1999.

USAF 2000. U.S. Air Force. *Final Supplemental Environmental Impact Statement (SEIS) for the Evolved Expendable Launch Vehicle Program,* HQ USAF/ILEVQ, 1260 Air Force Pentagon, Washington, DC March 2000.

USAF 2001. U.S. Air Force. *Integrated Natural Resource Management Plan.* 45th Space Wing, Patrick Air Force Base, Florida. 2001.

USAF 2002. U.S. Air Force. *General Plan, Cape Canaveral Air Force Station.* 45th Space Wing, Cape Canaveral Air Force Station, Florida. 2002.

USAF 2004. U.S. Air Force. *Range Safety User Requirements Manual.* Air Force Space Command Manual 91-710. July 1, 2004. Available at http://www.e-publishing.af.mil/.

USBC 2000a. U.S. Bureau of the Census. Total United States Population for 2000. Available at http://factfinder.census.gov.

USBC 2000b. U.S. Bureau of the Census. *Table DP 1-Profile of Selected Characteristics: 2000. Geographic area: Brevard, Indian River, Orange, Osceola, Seminole, and Volusia Counties.* 2000.

USBC 2000c. U.S. Bureau of the Census. *Table DP 3-Profile of Selected Characteristics: 2000. Geographic area: Brevard, Indian River, Orange, Osceola, Seminole, and Volusia Counties.* 2000.

USBC 2002. U.S. Bureau of the Census. *Poverty in the United States: 2002*. September 2003. Available at http://www.census.gov/hhes/www/poverty/poverty02.html.

USBC 2005a. U.S. Bureau of the Census. *Florida Quickfacts*. Available at http://quickfacts.census.gov.

USBC 2005b. U.S. Bureau of the Census. *International Database*. Available at http://www.census.gov/ipc/www/idbnew.html.

USGS 1995. U.S. Geological Survey. *USGS radon information.* Available at http://energy.cr.usgs.gov/radon/rnus.html.

This page intentionally left blank.

# APPENDIX A
# GLOSSARY OF TERMS

This page intentionally left blank.

# APPENDIX A

# GLOSSARY OF TERMS

**99-th percentile**—An expression of an outcome that would not occur in more than 1 percent of all statistical samples (that is, 1 percent of the outcomes would be greater than the 99-th percentile level); the 99-th percentile is derived from the distribution of outcomes on which the mean value is based.

**accident environment**—Conditions resulting from an accident, such as blast overpressure, fragments, and fire.

**affected environment**—A description of the existing environment that could be affected by the Proposed Action or its alternatives.

**ambient air**—The surrounding atmosphere, usually the outside air, as it exists around people, plants, and structures. (It is not the air in the immediate proximity of an emission source.)

**Atlas**—A family of launch vehicles manufactured by the Lockheed Martin Space Systems Company.

**attainment**—An area is designated as being in attainment by the U.S. Environmental Protection Agency if it meets the **National Ambient Air Quality Standards (NAAQS)** for a given **criteria pollutant**. Non-attainment areas are areas in which any one of the NAAQS have been exceeded, maintenance areas are areas previously designated non attainment and subsequently re-designated as attainment, and unclassifiable areas are areas that cannot be classified on the basis of available information as meeting or not meeting the NAAQS for any one criteria pollutant.

**background radiation**—Ionizing radiation present in the environment from cosmic rays and natural sources in the Earth; background radiation varies considerably with location.

**conditional probability**—Within the context of this Environmental Impact Statement, the probability that a release of radioactive material could occur given an initiating accident (that is, the accident has occurred).

**confidence level**—In statistics, the degree of desired trust or assurance in a given result. A confidence level is always associated with some assertion and measures the probability that a given assertion is true.

**criteria pollutants**—The Clean Air Act requires the U.S. Environmental Protection Agency to set air quality standards for common and widespread pollutants after preparing criteria documents summarizing scientific knowledge on their health effects. Currently, there are standards in effect for six criteria pollutants: sulfur dioxide ($SO_2$), carbon monoxide (CO), particulate matter equal to or less than 10 microns in diameter ($PM_{10}$), nitrogen dioxide ($NO_2$), ozone ($O_3$), and lead (Pb).

**cultural resources**—The prehistoric and historic districts, sites, buildings, objects, or any other physical activity considered important to a culture, subculture, or a community for scientific, traditional, religious, or any other reason.

**cumulative impact**—The impact on the environment which results from the incremental impact of the action when added to other past, present, and reasonably foreseeable future actions regardless of what agency (Federal or non-Federal) or person undertakes other such actions. Cumulative impacts can result from individually minor but collectively significant actions taking place over a period of time.

**curie (Ci)**—A measure of the radioactivity level of a substance (that is, the number of unstable nuclei that are undergoing transformation in the process of radioactivity decay); one curie equals the disintegration of $3.7 \times 10^{10}$ (37 billion) nuclei per second and is equal to the radioactivity of one gram of radium-226.

**decibel (dB)**—A logarithmic measurement unit that describes a particular sound pressure level compared to a standard reference value. The threshold of human hearing is approximately 0 dB, and the threshold of discomfort or pain is around 120 dB. A-weighted decibels (dBA) refer to measured decibels whose frequencies have been adjusted to correspond to the highest sensitivity of human hearing, which is typically in the frequency range of 1,000 to 4,000 hertz.

**Delta**—A family of space launch vehicles manufactured by The Boeing Company.

**dose**—The amount of energy deposited in the body by ionizing radiation per unit body mass.

**essential fish habitat**—The United States Congress defined essential fish habitat for Federally managed fish species as “those waters and substrate necessary to fish for spawning, breeding, feeding, or growth to maturity” (16 U.S.C. 1802(10)). The conservation of essential fish habitat is an important component of building and maintaining sustainable fisheries.

**exposure to radiation**—The incidence of radiation from either external or internal sources on living or inanimate material by accident or intent.

**first stage**—The launch vehicle stage that provides thrust at lift-off.

**full stack intact impact (FSII)**—For the purpose of this Environmental Impact Statement, a postulated accident in which the entire launch vehicle (that is, all stages, other vehicle elements, and the payload) impacts the ground in an intact configuration due to a failure at or very shortly after lift-off.

**General Conformity Rule**—The General Conformity Rule is applicable to non attainment or maintenance areas (see **attainment**) as designated by the U.S. Environmental Protection Agency (EPA), and ensures that Federal actions conform to each State Implementation Plan for air quality. These plans, approved by the EPA, are each State's individual plan to achieve the **NAAQS** as required by the Clean Air Act. The EPA is required to promulgate a Federal

Implementation Plan if a State defaults on its implementation plan. A conformity requirement determination for the action is made from influencing factors, including, but not limited to, non attainment or maintenance status of the area, types of emissions and emission levels resulting from the action, and local impacts on air quality.

**General Purpose Heat Source (GPHS)**—A passive device that produces heat from the radioactive decay of plutonium (in a ceramic form called plutonium dioxide consisting mostly of plutonium-238, a non-weapons grade isotope). This heat can then be converted into usable electrical power.

**geology**—The study or science of the Earth (or any solid celestial body), its history, and its life as recorded in the rocks.

**health effects**—Within the context of this Environmental Impact Statement, health effects are defined as the number of additional **latent cancer fatalities** due to a radioactive release (that is, the number of cancer fatalities resulting from this release that are in excess of those cancer fatalities which the general population would normally experience from other causes).

**hydrazine**—A toxic, colorless liquid fuel that is hypergolic (able to burn spontaneously on contact) when mixed with an oxidizer such as nitrogen tetroxide ($N_2O_4$) or placed in contact with a catalyst. Vapors may form explosive mixtures with air.

**initiating probability**—The probability that an identified accident and associated adverse conditions (accident environments) will occur.

**ionosphere**—An upper atmospheric region where ionization of atmospheric gases occurs.

**isotope**—Any of two or more species of atoms of a chemical element with the same atomic number and nearly identical chemical behavior, but with different atomic mass (number of neutrons) or mass number and different physical properties.

**latent cancer fatalities**—Estimation of latent cancer fatalities assumes that 1) exposures to the radioactive material released to the environment occur over a 50-year period, and 2) the internal **dose** resulting from such exposure are 50-year committed doses, meaning that following inhalation or ingestion of the radioactive material, the resulting internal doses are based on tracking the material in the body for a 50-year period. The time period over which latent cancer fatalities occur is undefined, and could occur well after 50 years following the release.

**launch azimuth**—The initial angle, measured clockwise from North, which a launch vehicle takes as it begins to ascend.

**maximally exposed individual**—A hypothetical person that would receive the maximum predicted dose.

**mean**—The outcome (**source term**, **dose**, **health effects**, or land contamination as used in this Environmental Impact Statement) that would be anticipated if an

accident which released radioactive material were to occur; the mean is a statistical expression of probability-weighted values (source terms or radiological consequences).

**Multi-Mission Radioisotope Thermoelectric Generator (MMRTG)**—A new generation power source that converts the heat from the radioactive decay of plutonium (in a ceramic form called plutonium dioxide consisting mostly of plutonium-238, a non-weapons grade isotope) into usable electrical energy.

**National Ambient Air Quality Standards (NAAQS)**— Section 109 of the Clean Air Act requires the U.S. Environmental Protection Agency to set nationwide standards, the NAAQS, for widespread air pollutants. Currently, six pollutants are regulated by primary and secondary NAAQS (see **criteria pollutants**).

**oxides of nitrogen ($NO_X$)**—Gases formed primarily by fuel combustion, which contribute to the formation of acid rain. Hydrocarbons and oxides of nitrogen combine in the presence of sunlight to form ozone, a major constituent of smog.

**parking orbit**—A temporary low-altitude Earth orbit in which a spacecraft with its second or third launch vehicle stage waits until it is in the proper position to continue toward its next or final destination.

**payload**—The element(s) that a launch vehicle or spacecraft carries over and above what is necessary for the operation of the vehicle. For a launch vehicle, the spacecraft being launched is the payload; for a scientific spacecraft, the suite of science instruments is the payload.

**payload fairing (PLF)**—The protective shell on a launch vehicle that encapsulates the spacecraft through atmospheric ascent.

**radiation**—The emitted particles (alpha, beta, neutrons) or photons (X-rays, gamma rays) from the nuclei of unstable (radioactive) atoms as a result of radioactive decay. Some elements are naturally radioactive; others are induced to become radioactive by bombardment in a nuclear reactor or other particle accelerator. The characteristics of naturally occurring radiation are indistinguishable from those of induced radiation.

**radiation dose**—The amount of energy from ionizing radiation deposited within tissues of the body; it is a time-integrated measure of potential damage to tissues from exposure to radiation and as such is related to health-based consequences.

**radioactive half-life**—The time required for one half of the atoms in a radioactive isotope to decay.

**rem**—The unit dose representing the amount of ionizing radiation needed to produce the same biological effects as one roentgen of high-penetration X-rays (about 200,000 electron volts). The biological effects of 1 rem are presumed to be independent of the type of radiation.

**risk**—Within the context of this Environmental Impact Statement, risk is defined as the expectation of **health effects** in a statistical sense (that is, the product of total

probability times the mean health effects resulting from a release of plutonium dioxide, and then summed over all conditions leading to a release).

**second stage**—The launch vehicle stage that continues to provide thrust during ascent after the vehicle's first stage has depleted its propellant and been jettisoned.

**solar longitude (of Mars)—**The apparent longitude of the sun seen on a celestial sphere whose equator is defined by the plane of Mars' orbit about the sun. The transition from Winter to Spring in the Northern hemisphere on Mars defines zero degrees solar longitude.

**source term**—The quantities of materials released during an accident to air or water pathways and the characteristics of the releases (for example, particle size distribution); used for determining accident consequences.

**stratosphere**—An upper portion of the atmosphere above the troposphere reaching a maximum height of 50 kilometers (31 miles) above the Earth's surface. The temperature is relatively constant in the lower stratosphere and gradually increases with altitude. The stratosphere is the Earth's main ozone producing region.

**take**—To pursue, hunt, shoot, wound, kill, trap, capture, or collect, or attempt to pursue, hunt, shoot, wound, kill, trap, capture, or collect (50 CFR 10.12).

**tropopause**—The boundary between the troposphere and stratosphere, usually characterized by an abrupt change of lapse rate; the change is in the direction of increased atmospheric stability from regions below to regions above the tropopause; its height varies from 15 kilometers (9 miles) in the tropics to about 10 kilometers (6 miles) in polar regions.

**troposphere**—The portion of the atmosphere next to the Earth's surface in which the temperature rapidly decreases with altitude, clouds form, and convection is active. The troposphere begins at ground level and extends to an altitude of 10 to 12 kilometers (6 to 8 miles) above the Earth's surface.

**unavoidable adverse effects**—Effects that can not be avoided due to constraints in alternatives. These effects must be disclosed, discussed and mitigated, if practicable.

This page intentionally left blank.

# APPENDIX B
# EFFECTS OF PLUTONIUM ON THE ENVIRONMENT

# APPENDIX B

# EFFECTS OF PLUTONIUM ON THE ENVIRONMENT

## TABLE OF CONTENTS

**Page**

B.1 INTRODUCTION ..... B-3

B.2 CHEMICAL AND PHYSICAL PROPERTIES THAT ARE IMPORTANT FOR BEHAVIOR IN THE ENVIRONMENT AND THE HUMAN BODY ..... B-3

B.2.1 Chemical Form ..... B-3
B.2.2 Particle Size Distribution ..... B-3
B.2.3 Solubility ..... B-4
B.2.4 Half Life ..... B-4
B.2.5 Decay Modes ..... B-4

B.3 THE TRANSPORT OF PLUTONIUM OXIDES THROUGH THE ENVIRONMENT ..... B-5

B.3.1 During Plume Passage ..... B-5
B.3.2 Chronic Exposure Pathways ..... B-5
B.3.2.1 Resuspension ..... B-6
B.3.2.2 Vegetable Ingestion ..... B-6
B.3.2.3 External Radiation ..... B-7
B.3.2.4 Seafood and Fish Pathway ..... B-7
B.3.2.5 Contamination of Drinking Water ..... B-8

B.4 TRANSPORT AND DEPOSITION OF RADIONUCLIDES IN THE HUMAN BODY ..... B-8

B.5 CANCER INDUCTION AND GENETIC EFFECTS ..... B-9

B.6 REFERENCES FOR APPENDIX B ..... B-11

# APPENDIX B

# EFFECTS OF PLUTONIUM ON THE ENVIRONMENT

## B.1 INTRODUCTION

This appendix addresses the potential impacts from a radioactive source containing plutonium (Pu)-238 released to the environment, which could occur in any of the low-probability accidents described in Chapter 4 of this Draft Environmental Impact Statement (DEIS). The health and environmental risks associated with Pu-238 were previously addressed in the National Aeronautics and Space Administration's (NASA) EISs for the Galileo, Ulysses, Cassini, Mars Exploration Rovers, and New Horizons missions (NASA 1989, NASA 1990, NASA 1995, NASA 1997, NASA 2002, and NASA 2005).

The Mars Science Laboratory (MSL) rover carries one Multi-Mission Radioisotope Thermoelectric Generator (MMRTG) containing approximately 4.8 kilograms (10.6 pounds) of plutonium dioxide ($PuO_2$) (consisting mostly of Pu-238), with a total activity of about 58,700 curies.

The purpose of this appendix is to describe qualitatively the factors that influence the movement of $PuO_2$ through the environment and into the human body, together with the subsequent health effects, in the event that there is an accidental release of $PuO_2$ from the spacecraft's MMRTG.

## B.2 CHEMICAL AND PHYSICAL PROPERTIES THAT ARE IMPORTANT FOR BEHAVIOR IN THE ENVIRONMENT AND THE HUMAN BODY

In this section, the following important characteristics are discussed:

- Chemical form;
- Particle size distribution;
- Solubility;
- Half life; and
- Decay modes.

### B.2.1 Chemical Form

In the MMRTG for the MSL mission, the Pu-238 is present as the dioxide. The predominant risk pathways are those in which this material is released as the result of ground impact and fire. It is therefore assumed that the Pu remains oxidized. This is important because the chemical form influences the solubility, which in turn strongly influences such factors as bioaccumulation and uptake in the human body.

### B.2.2 Particle Size Distribution

It is also important to understand the physical form of the material, in particular the particle size distribution, which influences, among other things: whether the material will

fall to the ground in the immediate vicinity of the accident or will be transported over long distances; the initial deposition and subsequent resuspension of particles in both air and water; solubility in water and in biological fluids; and whether or not the material can be inhaled and where it will be deposited and retained within the human respiratory system. Generally speaking, larger particles have less potential for suspension and resuspension; as the particle size decreases, particles are more easily kept in suspension.

The initial particle size distribution is a function of the conditions of the accident. For example, the launch area source terms could initially be in the form of vapor as a result of exposure to fire. The vapors would contain not only the radionuclides but also various structural materials. The radionuclides would tend to condense with and agglomerate with these other materials, which would then predominantly determine the characteristics of the aerosol. The potential for uptake of inhaled particles is critically dependent on the size of the particles (respirable particles are generally considered to be 10 microns or less, although larger sizes can be deposited in the upper respiratory tract).

### B.2.3 Solubility

A number of factors affect the solubility of $PuO_2$ in water. Physical parameters most important to the solubility of $PuO_2$ are the reactive surface area and oxidation state of plutonium and the water chemistry, including pH, reduction/oxidation potential, and temperature. The mass to surface area ratios of particles affect the reactivity and solubility, with solubility being inversely related to particle size. In general, $PuO_2$ is insoluble.

Because $PuO_2$ is so insoluble, movement through the environment depends on physical processes. $PuO_2$ may be carried into the soil by a number of routes, including the percolation of rainfall and subsequent leaching of particles into the soil, animal burrowing activity, and plowing or other disturbance of the soil by humans. Migration of the $PuO_2$ into the soil column is of concern, primarily because of the potential for $PuO_2$ to reach groundwater aquifers used as drinking water supplies. Once deposited on soil, however, $PuO_2$ appears to be extremely stable. Soil profile studies have shown that generally more than 95 percent of the $PuO_2$ from nuclear weapons fallout remained in the top 5 centimeters (2 inches) of surface soil (in undisturbed areas) for 10 to 20 years following deposition (DOE 1987).

### B.2.4 Half Life

The half-life of Pu-238 is 87.7 years. This half-life is particularly important for chronic exposure pathways (inhalation and ingestion). Over a human lifetime (nominally 70 years), the amount of Pu-238 in the body is reduced by less than a factor of 2 due to radioactive decay.

### B.2.5 Decay Modes

Pu-238 is an alpha particle emitter with decay energies of about 5 million electron volts. Its radioactive decay products are also alpha-emitters with about the same decay

energy. These alpha particles are what predominantly determine the effects on the human body. Pu-238 can also undergo extremely unlikely spontaneous fission, but with significantly smaller effects.

## B.3 THE TRANSPORT OF PLUTONIUM OXIDES THROUGH THE ENVIRONMENT

Plutonium is one of the most widely studied elements in terms of chemistry and environmental behavior. Although its chemistry and oxidation states are quite diverse, the element's environmental mobility is very limited (INSRP 1989). The pathways and the generalized behavior of plutonium in the environment are described in the literature (*e.g*., Aarkrog 1977, Pinder and Doswell 1985, Pinder *et al*. 1987, Yang and Nelson 1984). The extent and magnitude of potential environmental impacts caused by $PuO_2$ releases depend on the mobility and availability of $PuO_2$ and are directly controlled by a number of physical and chemical parameters, including particle size, potential for suspension, deposition and resuspension, solubility, and oxidation state of any dissolved plutonium.

This Section discusses the various ways in which plutonium can be transported through the environment to the point at which it is taken into or irradiates the human body. The modeling for the MSL mission encompasses both short-term (during plume passage) and long-term (chronic exposure) pathways.

### B.3.1 <u>During Plume Passage</u>

The predominant pathway during the passage of the airborne plume is inhalation. The important parameters in this calculation are the rate of dilution of the plume as it travels downwind, the deposition mechanisms that deplete the plume and leave radioactive material on the ground, and the rate of inhalation. All of these parameters and mechanisms are independent of the fact that the radionuclide in question is Pu-238. For example, the small particle sizes arising from agglomeration onto aluminum oxide particles (see Section B.1.2) mean that gravitational settling is not important. It is therefore appropriate to use a standard Gaussian model for the atmospheric dispersion. Similarly, the small particle size means that, once it is transported to a human receptor, it is inhaled. Work done for previous EISs shows that inhalation of the particles in the passing plume and of resuspended particles are the two most important contributors to the radiation dose accumulated by human receptors.

The other pathway that is potentially important during plume passage is cloudshine – the irradiation of the human body by neutrons and gamma rays emitted by the passing plume of radioactive material. However, because Pu-238 emits predominantly alpha particles, this irradiation pathway is not important for the MSL Mission.

### B.3.2 <u>Chronic Exposure Pathways</u>

This section considers contributions due to resuspension, ingestion of vegetables, external exposure, seafood ingestion, and contamination of drinking water.

#### B.3.2.1 Resuspension

For launch area accidents, the resuspension model used in the analysis starts with an initial resuspension factor that decreases exponentially to a constant long term resuspension factor (Momeni *et al*. 1979, Strenge and Bander 1981). For materials deposited after traveling more than 100 kilometers (62 miles) from the source of a release, or released high in the atmosphere, the resuspension factor is at all times typically similar to the long term resuspension factor (Bennett 1976, UNSCEAR 1982). The work done in previous EISs shows that resuspension is the most significant of the chronic exposure pathways and is comparable to or larger in its effects on humans than is the direct inhalation pathway.

#### B.3.2.2 Vegetable Ingestion

Parameters used for estimating the uptake from harvesting and consumption of agricultural products have been measured (Baes *et al*. 1984, Rupp 1980, Yang and Nelson 1984). These and similar agricultural and food consumption parameters and plutonium ingestion parameters (ICRP 1979) are used as the basis for estimating human doses via ingestion. For example, an analysis of Pu-238 contamination of orange trees shows that a total of only 1 percent of the plutonium actually aerially deposited on the plants would be transported on fruit from field to market during the 12 months following harvesting (Pinder *et al*. 1987). Most of this plutonium would adhere to the fruit's peel and would be removed prior to ingestion; uptake to the orange itself would be extremely small or nonexistent.

Four mechanisms of vegetable ingestion were taken into account, as described below.

- *Initial deposition immediately following the accident* – the amount initially deposited per curie released depends on non-$PuO_2$ specific factors such as particle size distribution and characteristics of the vegetation. The predicted amount of radioactive material ingested by humans then depends on assumptions about physical mechanisms and vegetable distribution, such as: the removal half-life for leaf-deposited material, a leaf interception factor, and a vegetable density. Additionally, harvesting (whether continuous, delayed, or crops are destroyed) and consumption assumptions would affect the predicted amount of radioactive material ingested by humans.

- *Continuous redeposition on the vegetables due to resuspension over the first 50 years following the accident* – the amount ingested by individuals is controlled by the resuspension mechanism (see above), the assumed dry deposition velocity and assumptions about harvesting and distribution.

- *Root uptake* – this mechanism is in principle highly radionuclide and vegetable-specific and depends on such factors as solubility, radionuclide chemistry and vegetable chemistry. In general, $PuO_2$ is insoluble and is poorly transported in terrestrial environments. Most forms of plutonium, including $PuO_2$, are removed from biological pathways by processes such as fixation in soil. Only small amounts of material would be concentrated by biological accumulation into grazing animals, and vegetables.

- *Rain splashup* – this mechanism depends in part on the characteristics of the soil and the rainfall.

For Pu-238, radiation doses arising via these pathways are a small fraction of those arising from the inhalation pathways.

#### B.3.2.3 External Radiation

External radiation from material deposited on the ground and resuspended material is calculated using standard methods for cloudshine and groundshine. Because Pu-238 is predominantly an alpha emitter, this exposure pathway is relatively unimportant.

#### B.3.2.4 Seafood and Fish Pathway

Radiation doses can result from the bioaccumulation of plutonium deposited on the surfaces of inland waters or oceans. The predicted radiation doses arising from this pathway depend on a number of assumptions and physical and chemical processes, including how the deposited radionuclides are diluted in the water, how the radionuclides are partitioned between water and sediment, and how radionuclides are accumulated in different types of fish, crustaceans and mollusks.

In marine and aquatic systems, larger particles would quickly settle to the bottom sediments; smaller silt-size particles may remain in suspension within the water column for extended periods of time. Smaller particles may not even break the water surface (due to surface tension), forming a thin layer on the water surface that is subsequently transported to the shoreline by wind and wave action. Resuspension of smaller particles from the bottom could occur due to physical disturbance of the sediments by wave action and recreational uses of the water bodies (*e.g.*, swimming, boating, and fishing), as well as by the feeding activity of various marine and aquatic species. Particles of $PuO_2$, as a component of the bottom sediments, may also be transported toward and along the shoreline by wave action and currents in near-shore environments (NASA 1990).

Studies have indicated that bioaccumulation in marine organisms can vary widely depending on the type and population densities of seafood species impacted (*e.g.*, freshwater fish, saltwater fish, mollusks), the amount and particle size distribution of radioactive material released, and the deposition area.

$PuO_2$ entering into a water/sediment system would be preferentially taken out of solution and bound in saturated sediments in amounts on the order of 100,000 times greater than the amounts that would remain in the associated water column (NASA 1990).

Clays, organics, and other anionic constituents tend to bind most of the $PuO_2$ particles in the sediment column. The binding of $PuO_2$ usually occurs in the first few centimeters of sediment, greatly reducing the concentration of this constituent with depth.

Overall, the seafood pathway is insignificant for $PuO_2$. This is due to a combination of considerable dilution in the water, overwhelming partition into sediment, and small bioaccumulation factors.

#### B.3.2.5 Contamination of Drinking Water

It is possible that surface water runoff containing $PuO_2$ could directly contaminate drinking water supplies that originate from surface water bodies, because this type of contamination is primarily due to suspended $PuO_2$ particles and not from dissolved $PuO_2$. Filtering the surface water before chemical treatment would reduce the concentration of total plutonium to very low levels (NASA 1990).

## B.4 TRANSPORT AND DEPOSITION OF RADIONUCLIDES IN THE HUMAN BODY

The International Commission on Radiological Protection (ICRP) has developed accepted models for the distribution of inhaled and ingested radionuclides in the body. The ultimate fate of these radionuclides depends on such factors as particle size distribution, solubility, and chemistry. The ICRP models requires knowledge of numerous parameters, most of which are obtained empirically (*e.g.*, there is no theoretical model for determining what fraction of ingested plutonium (say) enters the bloodstream). The required parameters are obtained from animal experiments and, if available, from human studies concerning the effects of nuclear weapons and of nuclear fallout. Of the transuranium elements, plutonium is by far the most widely studied.

$PuO_2$ that enters the human body by inhalation or ingestion has many possible fates, all of which have been studied in detail (ICRP 1979; ICRP 1986). The inhalation route is found to be approximately 1,000 times as effective as ingestion in transporting plutonium to the blood, due to the short time of residency, the chemical properties of plutonium, and the physiological environment of the gastro-intestinal (GI) tract (ICRP 1979).

Ingested $PuO_2$ would quickly pass through the digestive system and be excreted with only a small quantity being absorbed via the mucosa into the bloodstream. The fractional absorption of $PuO_2$ is estimated to average about 1 part in 100,000 ingested (ICRP 1979; ICRP 1986) – that is, in ICRP terminology, the $f_1$ factor for ingestion is $10^{-5}$. The fractional absorption is based on the average individual. Note that $PuO_2$ in the environment could become more soluble with time due to the use of fertilizers in gardening, chlorination in drinking water, and conversion to soluble forms in seawater. Dietary and physiological factors, such as fasting, dietary calcium deficiency, disease or intake of medications, may also change the fractional absorption (ICRP 1986).

Inhaled $PuO_2$ would be transported to one or more portions of the respiratory system depending on the particle size. Generally, most particles larger than 5 to 10 microns would be intercepted in the nasopharyngeal region and either expelled or swallowed to pass through the digestive tract; what is not absorbed, would then be excreted. Particles smaller than about 5 microns would be transported to and remain in the trachea, bronchi, or deep lung regions. Particles reaching the deep lung would be cleared from the body much more slowly than those not entering the lung. For example, approximate micrometer-size $PuO_2$ particles would typically be cleared from the pulmonary area of the lung at the rate of 40 percent in the first day, and the remaining 60 percent cleared in 500 days (ICRP 1979). Particles captured in the mucous lining of the upper respiratory tract would be moved more rapidly to the pharynx, where they would be swallowed. Once swallowed, they would behave as if ingested.

Plutonium dioxide remaining in the lung would continuously irradiate lung tissue, and a small fraction would be transported over time directly to the blood or to lymph nodes and then to the blood. The estimated fraction of plutonium transferred directly from pulmonary lung tissues to the blood would be about 1 percent of the amount retained in the lungs, depending on the size distribution of ultra-fine particles. Smaller particles are likely to form over time from larger particles due to the natural fragmentation processes associated with radioactive decay and may also be transferred to the blood. Over a period of years, approximately 15 percent of the $PuO_2$ initially deposited in the lungs would be transferred to the lymph nodes. Of that, up to 90 percent would likely be retained in the lymph node with a 1,000 day half-life before being transferred to the blood (ICRP 1986). Overall, the $PuO_2$ $f_1$ factor for inhalation is the same as that for ingestion, *i.e.*, $10^{-5}$.

Once $PuO_2$ has entered the blood via ingestion or inhalation, it would circulate and be deposited primarily in the liver and skeletal system. It is currently accepted that plutonium transported by the blood is distributed to the following organs: 45 percent in the liver, 45 percent in the skeletal system, 0.035 percent in the testes, and 0.011 percent in ovaries with a non-measurable amount crossing the placenta and available for uptake by the fetus. The remaining 10 percent of the activity in the blood is excreted through the kidneys and colon or deposited in other tissues (ICRP 1979, ICRP 1986).

The estimated residence times in the liver, skeletal system, and gonads are quite long. Current estimates for 50 percent removal times for plutonium are 20 years for the liver, 50 years for the skeleton, and permanent retention for the gonads.

## B.5 CANCER INDUCTION AND GENETIC EFFECTS

The relationship between dose received and the probability of cancer induction is described by the Linear, No-Threshold (LNT) model. For low-level doses such as those predicted for potential accidents involving the MSL mission, the LNT model states that for a collective dose of 10,000 person-rem accumulated by a given population, it is expected that 5 to 6 cancers will develop (EPA 2002). Equivalently, for low levels of radiation dose, the probability of cancer induction in an individual is $5x10^{-4}$/rem to $6x10^{-4}$/rem (where the radiation dose in question is the Effective Dose Equivalent (EDE) to the whole body) no matter how small the dose. LNT is frequently extrapolated to doses as low as one ten thousandth of those for which there is direct evidence of cancer induction by radiation (Cohen 2000). The National Research Council in its report on the Biological Effects of Ionizing Radiation (BEIR) states that the available scientific information is consistent with a linear dose model for low exposure levels and that, in their judgment, it is unlikely that a threshold exists (NRC 2006).

The validity of the LNT model has been questioned by, among others, the Health Physics Society, which has issued a position statement (HPS 2001) that declares “In accordance with current radiation knowledge of health risks, the Health Physics Society recommends against quantitative estimation of health risks below an individual dose of 5 rem in one year or a lifetime dose of 10 rem in addition to background radiation. There is substantial and convincing evidence for health risks at high dose. Below

10 rem (which includes occupational and environmental exposures) risks of health effects are either too small to be observed or non-existent."

In the past decade, there have been numerous studies worldwide on the effects of low dose radiation. One particularly comprehensive program has been initiated by the U.S. Department of Energy, the Low Dose Radiation Research Program (LDRRP), the goal of which is to support research that will help determine health risks from exposures to low levels of radiation. Progress in these areas is documented on the LDRRP web site at http://www.er.doe.gov/production/ober/lowdose.html. The LDRRP began in 1999 and is currently planned to last 10 years.

A nearby cell may be affected in several ways by the ejection of an alpha particle from a decaying Pu-238 nucleus.

- The alpha particle entirely misses the cell and has no damaging effect.
- The alpha particle strikes the cell nucleus and kills it.
- The alpha particle strikes the cell nucleus, damaging the deoxyribonucleic acid (DNA), but the cell survives with one of the following results:
    - The damaged DNA is correctly repaired before cell division with no lasting effects.
    - The damaged DNA is not correctly repaired and the cell lives but does not reproduce and dies at the end of its life cycle (common for highly differentiated cells).
    - The damaged DNA is not correctly repaired and the cell lives to pass on defective genes to future generations of cells (common for undifferentiated stem cells).

*In vitro* cellular-level irradiation studies have indicated that undifferentiated cells (including human epithelial cells of the type commonly involved in many cancers and leukemias) can survive intact not just single but also multiple alpha particle tracks (Nagasawa and Little 1992, Kadhim *et al*. 1992, Evans 1992, Kadhim *et al*. 1994, Hei *et al*. 1997, Little 1997, Riches *et al*. 1997, Pugliese *et al*. 1997, Miller *et al*. 1999). There is also evidence that low level radiation stimulates biological defense mechanisms. Cohen (2000) reviews the evidence for this, including reference to a report of the United Nations Scientific Committee on the Effects of Atomic Radiation (UNSCEAR 1994).

Such biological defense mechanisms would tend to support the view that LNT is conservative. However, the latest research as documented on the above-referenced LDRRP web site suggests that it is premature to come to any definitive conclusion. For example, it is now possible to detect "bystander effects" in cells that do not have direct deposition of energy in them. These effects have been detected in model tissue systems by the Gray Laboratory. The past tendency has been to use localized dose to predict effects. However, this may not now be valid since there is a marked response in non-exposed cells and tissues. With bystander effects, especially for alpha particles, the use of dose as a common currency to predict risk may no longer be acceptable.

The biological impact of such observations on radiation risk require a continuing reevaluation.

The use of gene chip technology makes it possible to look more deeply into the mechanisms of action of low dose radiation exposure. The influence of dose, dose rate, tissue type and time on the level of gene expression is creating some very interesting postulates about extrapolation from high doses to low doses. Such data demonstrate that different mechanisms may be involved in radiation-induced changes at high doses as compared to the actions of low doses.

In conclusion, it is premature to consider changes in the cancer induction risk relationships used in this EIS.

## B.6 REFERENCES FOR APPENDIX B

Aarkrog 1977. "Environmental Behavior of Plutonium Accidentally Released at Thule, Greenland." *Health Physics Society Journal,* Volume 32, pp. 271-284. April 1977.

Baes et al. 1984. Baes, C., R. Sharp, A. Sjoreen, and R. Shor. "A Review and Analysis of Parameters for Assessing Transport of Environmentally Released Radionuclides Through Agriculture." Oak Ridge National Laboratory, ORNL-5786. September 1984.

Bennet 1976. "Transuranic Element Pathways to Man. Transuranium Nuclides in the Environment." Vienna: International Atomic Energy Agency. 1976.

Cohen 2000. "The Cancer Risk from Low Level Radiation: A Review of Recent Evidence." Medical Sentinel 2000; 5(4): 128-131. Copyright ©2000 Association of American Physicians and Surgeons.

DOE 1987. United States Department of Energy. *Environmental Research on Actinide Elements*. Document Number DOE 86008713. Washington, DC August 1987.

EPA 2002. United States Environmental Protection Agency. *Becoming Aware of Radiation Sources*. Available at http://www.epa.gov/radiation/understand/health_effects.htm#est_health_effects September 2002.

Evans 1992. "Alpha-particle After Effects." *Nature*, Volume 355, pp. 674-675. February 20, 1992.

Hei et al. 1997. Hei, T.K., L. Wu, S. Liu, D. Vannais, C. Waldren, and G. Randers-Pehrson. "Mutagenic Effects of a Single and an Exact Number of $\alpha$ Particles in Mammalian Cells." Proceedings of the National Academy of Sciences, Volume 94, pp. 3765-3770. April 1997.

HPS 2001. Health Physics Society. *Radiation Risk in Perspective – Position Paper of the Health Physics Society*. Adopted January 1996 and Reaffirmed March 2001.

ICRP 1979. International Commission on Radiological Protection. *Limits for Intakes of Radionuclides by Workers*. ICRP Publication 30, Part I, pp. 105-107. 1979.

ICRP 1986. International Commission on Radiological Protection. *The Metabolism of Plutonium and Related Elements*. ICRP Publication 48. 1986.

INSRP 1989. Interagency Nuclear Safety Review Panel. *Safety Evaluation Report for the Galileo Mission*, Volumes 1 and 2. INSRP 89-01. May 1989.

Kadhim et al. 1992. Kadhim, M.A., D.A. Macdonald, D.T. Goodhead, S.A. Lorimore, S.J. Marsden, and E.G. Wright. "Transmission of Chromosomal Instability after plutonium $\alpha$-particle Irradiation." *Nature*, Volume 355, pp.738-740. February 20, 1992.

Kadhim et al. 1994. Kadhim, M.A., S. Lorimore, M.D. Hepburn, D.T. Goodhead, V.J. Buckle, and E.G. Wright. "Alpha-particle-induced Chromosomal Instability in Human Bone Marrow Cells." *The Lancet*, Volume 344, Number 8928, p. 987. October 8, 1994.

Little 1997. "What Are the Risks of Low-level Exposure to $\alpha$ Radiation from Radon?," Proceedings of the *National Academy of Science*, Volume 94, pp. 5996-5997. June 1997.

Miller et al. 1999. Miller, R.C., G. Randers-Pehrson, C.R. Geard, E.J. Hall, and D.J. Brenner. "The Oncogenic Transforming Potential of the Passage of Single $\alpha$ Particles through Mammalian Cell Nuclei." Proceedings of the *National Academy of Sciences*, Volume 96, pp. 19-22. January 1999.

Momeni et al. 1979. Momeni, M.H., Y. Yuan, and A.J. Zielen. "The Uranium Dispersion and Dosimetry (UDAD) Code," NUREG/CR-0553, ANL/ES-72. May 1979.

Nagasawa and Little 1992. Nagasawa, H., and J. Little. "Induction of Sister Chromatid Exchanges By Extremely Low Doses of $\alpha$-Particles." *Cancer Research*, Volume 52, pp. 6394-6396. November 15, 1992.

NASA 1989. National Aeronautics and Space Administration. *Final Environmental Impact Statement for the Galileo Mission (Tier 2)*. Solar System Exploration Division, Office of Space Science and Applications, NASA Headquarters, Washington, DC May 1989.

NASA 1990. National Aeronautics and Space Administration. *Final Environmental Impact Statement for the Ulysses Mission (Tier 2)*. Solar System Exploration Division, Office of Space Science and Applications, NASA Headquarters, Washington, DC June 1990.

NASA 1995. National Aeronautics and Space Administration. *Final Environmental Impact Statement for the Cassini Mission*. Solar System Exploration Division, Office of Space Science, NASA Headquarters, Washington, DC June 1995.

NASA 1997. National Aeronautics and Space Administration. *Final Supplemental Environmental Impact Statement for the Cassini Mission*. Mission and Payload Development Division, Office of Space Science, NASA Headquarters, Washington, DC June 1997.

NASA 2002. National Aeronautics and Space Administration. *Final Environmental Impact Statement for the Mars Exploration Rover-2003 Project*. Mars Exploration Program Office, Office of Space Science, NASA Headquarters, Washington, DC December 2002.

NASA 2005. National Aeronautics and Space Administration. *Final Environmental Impact Statement for the New Horizons Mission.* Science Mission Directorate, NASA Headquarters, Washington, DC. July 2005.

NRC 2006, National Research Council of the National Academies. *Health Risks Form Exposure to Low Levels of Ionizing Radiation, BEIR VII Phase 2*. Committee to Assess Health Risks from Exposure to Low Levels of Ionizing Radiation. Washington DC, 2006

Pinder and Doswell 1985. Pinder, J., and A. Doswell. "Retention of $^{238}$Pu-Bearing Particles by Corn Plants." *Health Physics Society Journal*, Volume 49, pp. 771-776. 1985.

Pinder et al. 1987. Pinder, J., D. Adriano, T. Ciravolo, A. Doswell, and D. Yehling. "The Interception and Retention of $^{238}$Pu Deposition by Orange Trees." *Health Physics*, Volume 52, pp. 707-715. May 8, 1987.

Pugliese et al. 1997. Pugliese, M., M. Durantes, G.F. Grossi, F. Monforti, D. Orlando, A. Ottolenghi, and G. Gialanella. "Inactivation of Individual Mammalian Cells by Single $\alpha$ Particles." *Int. J. Radiat. Biol*., Volume 72, Number 4, pp. 397-407. 1997.

Riches et al. 1997. Riches, A.C., A. Herceg. P.E. Bryant, D.L. Stevens, and D.T. Goodhead. "Radiation-induced Transformation of SV40-immortalized Human Thyroid Epithelial Cells by Single Exposure to Plutonium $\alpha$-particles in Vitro." *Int. J. Radiat. Biol*., Volume 72, No. 5, pp. 515-521. 1997.

Rupp 1980. "Age Dependent Values of Dietary Intake for Assessing Human Exposures to Environmental Pollutants." *Health Physics Society Journal*. Volume 39, pp. 151-163. August 1980.

Strenge and Bander 1981. Strenge, D.L. and T.J. Bander. "MILDOS A Computer Program for Calculating Environmental Radiation Doses from Uranium Recovery Operations," NUREG/CR-2011/PNL-3767. April 1981.

UNSCEAR 1982. United Nations Scientific Committee on the Effects of Atomic Radiation. *Ionizing Radiation: Sources and Biological Effects*. New York. 1982.

UNSCEAR 1994. United Nations Scientific Committee on the Effects of Atomic Radiation. *Report to the General Assembly, Annex B: Adaptive Response*. New York. 1994.

Yang and Nelson 1984. Yang, Y., and C. Nelson. *An Estimation of the Daily Average Food Intake by Age and Sex for Use in Assessing the Radionuclide Intake of Individuals in the General Population.* Prepared for the U.S. Environmental Protection Agency, Report 520/1-84-021. 1984.

This page intentionally left blank.

# APPENDIX C
# ENVIRONMENTAL JUSTICE ANALYSIS

# APPENDIX C

# ENVIRONMENTAL JUSTICE ANALYSIS

## TABLE OF CONTENTS

**Page**

C.1 INTRODUCTION ..... C-3

C.2 DEFINITIONS AND APPROACH ..... C-3
- C.2.1 Minority Populations ..... C-3
- C.2.2 Low-Income Populations ..... C-5
- C.2.3 Disproportionately High And Adverse Human Health Effects ..... C-5
- C.2.4 Disproportionately High And Adverse Environmental Effects ..... C-5

C.3 METHODOLOGY ..... C-5
- C.3.1 Spatial Resolution ..... C-5
- C.3.2 Projections of Populations ..... C-6
- C.3.3 Environmental Justice Assessment ..... C-6

C.4 CHARACTERIZATION OF POTENTIALLY AFFECTED POPULATIONS ..... C-6

C.5 IMPACTS ON MINORITY AND LOW-INCOME POPULATIONS ..... C-8

C.6 REFERENCES FOR APPENDIX C ..... C-9

FIGURE C-1. THE AREA WITHIN 100 KM (62 MI) OF SLC-41 AND SLC-37 ..... C-4

TABLE C-1. COMPOSITION OF THE POPULATION AT VARYING DISTANCES FROM SLC-41 AND SLC-37 ..... C-7

# APPENDIX C

# ENVIRONMENTAL JUSTICE ANALYSIS

## C.1 INTRODUCTION

Executive Order (EO) 12898, *Federal Actions to Address Environmental Justice in Minority Populations and Low-Income Populations*, directs Federal agencies to identify and address, as appropriate, the disproportionately high and adverse health or environmental effects of their programs, policies, and activities on minority populations and low-income populations.

The Council on Environmental Quality (CEQ) has oversight responsibility for documentation prepared in compliance with the National Environmental Policy Act of 1969, as amended (NEPA) (42 U.S.C. 4321 *et seq.*). In December 1997, the CEQ released its guidance on Environmental Justice (CEQ 1997). The CEQ's guidance was adopted as the basis for the information provided in this Draft Environmental Impact Statement (DEIS) for the proposed Mars Science Laboratory (MSL) mission. The launch opportunity for the proposed MSL mission occurs during September - November 2009 and the next opportunity occurs 26 months later.

This appendix provides data necessary to assess the potential for disproportionately high and adverse human health or environmental effects on minority and low-income populations that may be associated with implementation of the MSL mission. The areas examined in this appendix include the land area within 100 kilometers (km) (62 miles (mi)) of Space Launch Complex 41 (SLC-41) located in the southernmost section of Kennedy Space Center, Florida, and the land area within 100 km (62 mi) of Space Launch Complex 37 (SLC-37), located on the northeastern section of Cape Canaveral Air Force Station (CCAFS), Florida. The counties that lie within 100 km (62 mi) of SLC-41 include Brevard, Indian River, Orange, Osceola, Seminole, Volusia, and small portions of Flagler, Lake, and Polk (Figure C-1). The counties that lie within 100 km (62 mi) of SLC-37 include those listed above with the exclusion of Flagler.

## C.2 DEFINITIONS AND APPROACH

### C.2.1 Minority Populations

During the Census of 2000, the U.S. Bureau of the Census (USBC) collected population data in compliance with guidance adopted by the Office of Management and Budget (OMB) (62 FR 58782). The OMB published its guidelines on aggregation of multiple race data in March 2000 (OMB 2000). Modifications to the definitions of minority individuals in the CEQ's guidance on Environmental Justice (CEQ 1997) were made in this analysis to comply with the OMB's guidelines issued in March 2000. The following definitions of minority individuals and population are used in this analysis of environmental justice:

*Minority Individuals*: Persons who are members of any of the following population groups: Hispanic or Latino of any race, American Indian or Alaska Native, Asian, Black

or African-American, Native Hawaiian or Other Pacific Islander, or Multiracial (and at least one race which is a minority race under CEQ guidance of 1997).

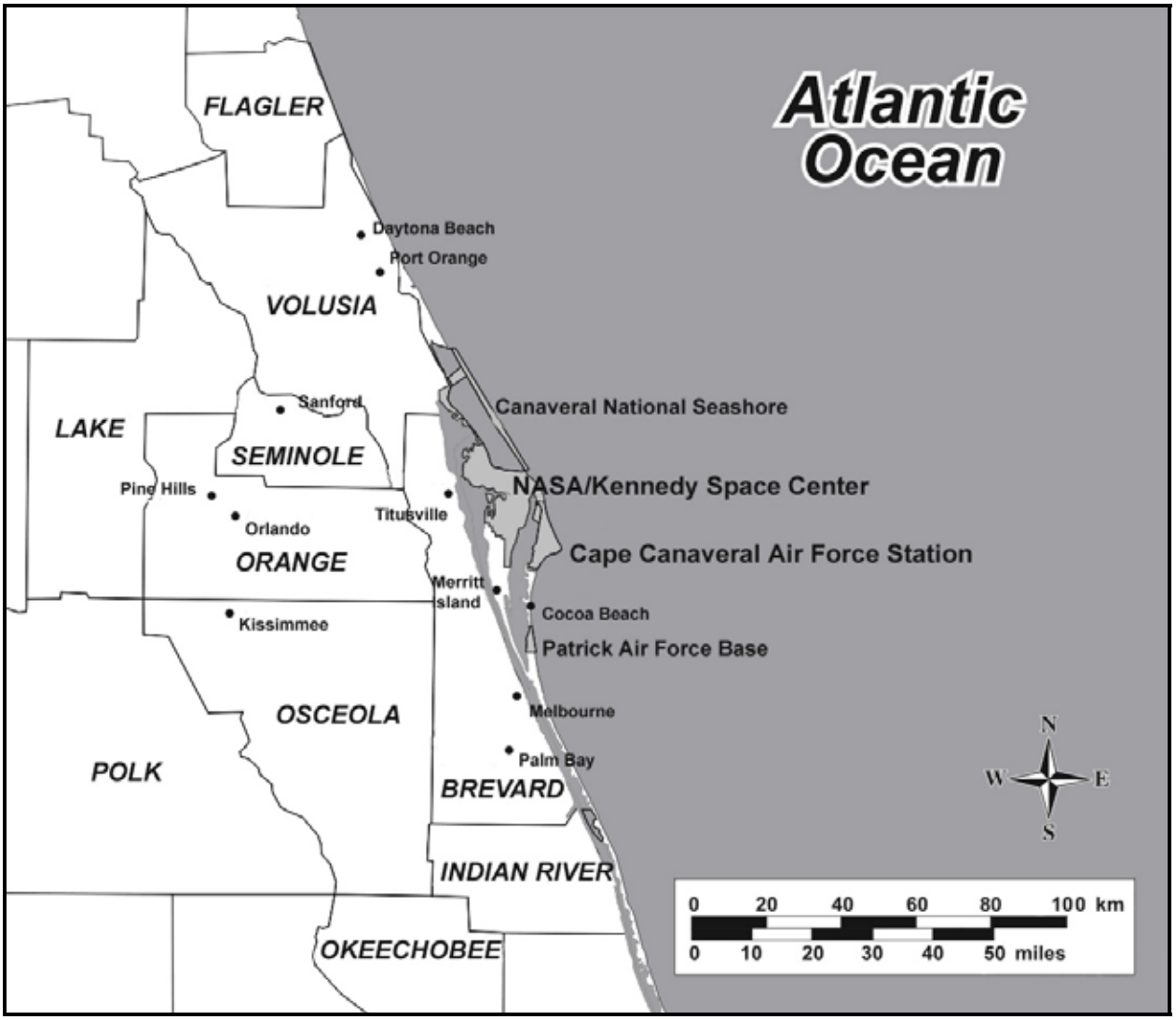


**FIGURE C-1. THE AREA WITHIN 100 KM (62 MI) OF SLC-41 AND SLC-37**

*Minority Population*: The total number of minority individuals residing within a potentially affected area.

Persons self-designated as Hispanic or Latino are included in the Hispanic or Latino population regardless of race. For example, Asians self-designated as Hispanic or Latino are included in the Hispanic or Latino population and not included in the Asian Population. Data used to characterize minority populations in the years 1990 and 2000 was extracted from LandView® 4 and 6 database management software containing Census 1990 and 2000 demographic data from the USBC (USBC 1998 and USBC 2003 respectively). Data used for the projection of population groups in Florida for the year 2009 was projected from the USBC's 1990 and 2000 census data for the area surrounding SLC-41 and SLC-37. Data used for the projection of the total resident

minority population in the area surrounding SLC-41 and SLC-37 for the year 2009 was extracted from population studies provided by the Bureau of Economic and Business Research (BEBR 2004) and the Office of Economic and Demographic Research (EDR 2005).

### C.2.2 Low-Income Populations

Poverty thresholds are used to identify "low-income" individuals and populations (CEQ 1997). The following definitions of low-income individuals and population are used in this analysis:

*Low-Income Individuals*: Persons whose self-reported income is less than the poverty threshold for a given year.

*Low-Income Population*: The total number of low-income individuals residing within a potentially affected area.

Data used to characterize low-income populations in the year 2000 was extracted from LandView® 6 database management software containing Census 2000 demographic data from the USBC (USBC 2003).

### C.2.3 Disproportionately High And Adverse Human Health Effects

Disproportionately high and adverse health effects are those that are significant (40 CFR 1508.27) or above generally accepted norms, and for which the risk of adverse impacts to minority populations or low-income populations appreciably exceeds the risk to the general population.

### C.2.4 Disproportionately High And Adverse Environmental Effects

Disproportionately high and adverse environmental effects are those that are significant (40 CFR 1508.27), and that would adversely impact minority populations or low-income populations appreciably more than the general population.

## C.3 METHODOLOGY

### C.3.1 Spatial Resolution

For the purposes of enumeration and analysis, the USBC has defined a variety of aerial units (USBC 2001; USBC 1992). Aerial units of concern in this document include (in order of increasing spatial resolution) states, counties, census tracts, block groups, and blocks. The block is the smallest of these entities and offers the finest spatial resolution. This term refers to a relatively small geographical area bounded on all sides by visible features such as streets and streams or by invisible boundaries such as city limits and property lines. During the 2000 census, the USBC subdivided the United States and its territories into 8,269,131 blocks. For comparison, the 2000 census used 3,232 counties, 66,304 census tracts, and 211,267 block groups.

In the analysis below, a combination of block group and block-level spatial resolution was used in the analysis of minority impacts. Block group-level spatial resolution was used to determine population groups living at a distance of 100 km (62 mi) from SLC-41

and SLC-37. Block-level data was used to determine population groups living at a distance of 20 km (12 mi) and 10 km (6 mi) from SLC-41 and SLC-37. Block group-level spatial resolution was used to determine total resident minority and low-income populations living at a distance of 100 km (62 mi) and 20 km (12 mi) from SLC-41 and SLC-37. Block-level data was used to determine total resident minority populations living at a distance of 10 km (6 mi) from SLC-41 and SLC-37.

### C.3.2 Projections of Populations

Projections of population groups living in the area of interest surrounding SLC-41 and SLC-37 for the year 2009 are shown in Table C-1. Population groups living within distances of 100 km (62 mi), 20 km (12 mi), and 10 km (6 mi) of SLC-41 and SLC-37 in 2009 were obtained as linear projections of resident populations for the years 1990 and 2000.

A direct comparison of 1990 Census data and 2000 Census data for minority groups is not possible. During the 2000 Census, the USBC modified its enumerations methodology to include multiracial responses and added a separate racial category, "Native Hawaiian or Other Pacific Islander". As an individual may report more than one race, the aggregate of Population Group may not match the total. For the 1990 Census year, the American Indian includes Eskimo or Aleut groups, the Asian includes Pacific Islander groups, and the Hispanic/Latino includes Hispanics of any race. For the 2000 census year, the Asian includes Native Hawaiian and other Pacific Islander groups and the Hispanic/Latino includes Hispanics of any race.

### C.3.3 Environmental Justice Assessment

The purpose of this analysis is to (1) identify minority populations and low-income populations residing that would be potentially affected by implementation of the Proposed Action (Alternative 1) or Alternatives and (2) determine if implementation of the Proposed Action or Alternatives would result in disproportionately high and adverse effects on these populations. In the event that radiological or other human health risks resulting from the implementation of the Proposed Action or Alternatives are found to be significant, then the health risks to minority populations and low-income populations will be evaluated to determine if they are disproportionately high.

## C.4 CHARACTERIZATION OF POTENTIALLY AFFECTED POPULATIONS

The land area within 100 km (62 mi) of SCL-41 and SLC-37 includes approximately 1.3 million hectares (3.3 million acres) of central Florida's eastern coast. Approximately 2.4 million persons lived within 100 km (62 mi) of SLC-41 and SLC-37 in the year 2000 (Table C-1). Between 1990 and 2000, the minority population within 100 km (62 mi) of SLC-41 and SLC-37 nearly doubled, and by 2000, minority persons comprised approximately 30 percent of the total population. By the year 2009, the total population is projected to increase to nearly 3 million persons, and minorities are projected to comprise approximately 35 percent of the total population.

In 2000, approximately one-half of the total and minority populations lived in urban areas of Orange, Seminole and Volusia Counties and less than one half percent of the

total minority population lived within 20 km (12 mi) of SLC-41 and SLC-37. No persons lived within 10 km (6 mi) of SLC-41 in 2000. An estimated 56 persons lived within 10 km (6 mi) of SLC-37 in 2000 and approximately 73 persons are projected to live within 10 km (6 mi) of SLC-37 in 2009.

## TABLE C-1. COMPOSITION OF THE POPULATION AT VARYING DISTANCES FROM SLC-41 AND SLC-37

| Population | Launch Complex | 100 km (62 mi) | | | 20 km (12 mi) | | | 10 km (6 mi) | | |
|---|---|---|---|---|---|---|---|---|---|---|
| | | 1990 | 2000 | 2009 [(a)] | 1990 | 2000 | 2009 [(a)] | 1990 | 2000 | 2009 [(a)] |
| White alone | SLC-41 | 1,592,182 | 1,860,022 | 2,139,967 | 2,191 | 2,280 | 2,363 | 1 | 0 | 0 |
| | SLC-37 | 1,579,770 | 1,844,060 | 2,119,724 | 14,826 | 19,607 | 25,205 | 1 | 10 | 13 |
| Black or African American alone | SLC-41 | 197,608 | 290,346 | 410,507 | 19 | 67 | 100 | 0 | 0 | 0 |
| | SLC-37 | 201,454 | 294,020 | 413,081 | 222 | 252 | 283 | 0 | 29 | 33 |
| American Indian and Alaska Native alone | SLC-41 | 5,496 | 8,128 | 11,559 | 11 | 17 | 25 | 0 | 0 | 0 |
| | SLC-37 | 5,453 | 8,037 | 11,400 | 102 | 76 | 83 | 0 | 0 | 0 |
| Asian alone | SLC-41 | 28,736 | 54,526 | 97,003 | 14 | 24 | 39 | 0 | 0 | 0 |
| | SLC-37 | 28,638 | 54,394 | 96,932 | 205 | 393 | 706 | 0 | 2 | 4 |
| Native Hawaiian and Other Pacific Islander alone | SLC-41 | No Data | 1,620 | 2,049 | No Data | 3 | 3 | No Data | 0 | 0 |
| | SLC-37 | No Data | 1,611 | 2,038 | No Data | 13 | 17 | No Data | 0 | 0 |
| Some other race alone | SLC-41 | No Data | 93,953 | 118,851 | No Data | 19 | 21 | No Data | 0 | 0 |
| | SLC-37 | No Data | 92,987 | 117,629 | No Data | 123 | 161 | No Data | 11 | 14 |
| Two or more races | SLC-41 | No Data | 59,585 | 75,375 | No Data | 41 | 45 | No Data | 0 | 0 |
| | SLC-37 | No Data | 59,399 | 75,140 | No Data | 296 | 388 | No Data | 4 | 5 |
| Hispanic or Latino | SLC-41 | 121,169 | 308,800 | 602,031 | 27 | 96 | 187 | 0 | 0 | 0 |
| | SLC-37 | 120,694 | 307,084 | 598,685 | 463 | 758 | 1,478 | 0 | 17 | 33 |
| Total | SLC-41 | 1,855,532 | 2,368,180 | 2,995,747 | 2,237 | 2,451 | 2,661 | 1 | 0 | 0 |
| | SLC-37 | 1,846,684 | 2,354,508 | 2,978,453 | 15,419 | 20,760 | 27,132 | 1 | 56 | 73 |
| Percent Minority | SLC-41 | 19% | 29.4% | 34.7% | 3.2% | 9% | 12.4% | No Data | 0 | 0 |
| | SLC-37 | 19.3% | 29.6% | 34.9% | 6.4% | 8.3% | 9.5% | No Data | 82.1% | 82.2% |
| Percent Low Income | SLC-41 | No Data | 10.4% | — | No Data | 3.9% | — | No Data | 0 | 0 |
| | SLC-37 | No Data | 10.5% | — | No Data | 7% | — | No Data | No Data | — |

Sources EDR 2005; BEBR 2004; USBC 2003; and USBC 1998

(a) Projected population values for 2009 do not represent absolute limits to growth; for any group, the future population may be above or below the projected value. — Denotes insufficient data is available to accurately project the estimate.

Note: Because an individual may report more than one race, the aggregate of the population groups may not match the total population.

Hispanic or Latino and Black or African-American populations were the largest minority groups living within 100 km (62 mi) of SLC-41 and SLC-37 in the year 2000. Moving outward from the CCAFS boundary, Blacks or African-Americans are the largest

resident minority group until approximately the outskirts of the City of Orlando. Due to the relatively large concentration of Hispanics or Latinos in the Orlando Metropolitan Area, Hispanics or Latinos comprise the largest group of minority residents in the total area. Hispanic or Latino populations are projected to remain the largest minority group through 2009.

Data from Census 2000 (USBC 2003) shows that 10.4 percent of the population living within 100 km (62 mi) of SLC-41 and 10.5 percent of the population living within 100 km (62 mi) of SLC-37 reported incomes below the poverty threshold; lower percentages than reported by Florida (12.5 percent) and the United States (12.4 percent). During the same period, 3.9 percent of the population living within 20 km (12 mi) of SLC-41 and 7 percent of the population living within 20 km (12 mi) of SLC-37 reported incomes below the poverty threshold.

## C.5 IMPACTS ON MINORITY AND LOW-INCOME POPULATIONS

As discussed in Chapter 4 of this DEIS, accidents during launch of the proposed MSL mission could result in human exposure to radioactive and other hazardous materials. Plutonium-238 is the primary radioactive material of concern. Potential radiological releases could affect populations residing both within and beyond 100 km (62 mi) of the launch complex. As shown in Table 4-3 of Chapter 4, if the Proposed Action (Alternative 1) is implemented, and if an accidental release of radioactive material were to occur during any mission phase, on average no latent cancer fatalities would be expected to occur.

Mission risks (consequences that would occur in the event of a radioactive release multiplied by the probability of a release) are also small. As shown in Table 4-2, the likelihood of an accident resulting in a release of radioactive material during the pre-launch and early launch phases combined is $4.5 \times 10^{-3}$ (approximately 1 in 230). The corresponding risk to the local population (persons residing within 100 km (62 mi) of the launch facilities) of a latent cancer fatality resulting from an accident in pre-launch or early launch is $5.4 \times 10^{-4}$ (approximately 1 in 1,900) (Table 4-6). The risk to the global population (persons residing more than 100 km (62 mi) from the launch site) of a latent cancer fatality resulting from an accident during the MSL mission is $3.7 \times 10^{-4}$ (approximately 1 in 2,700).

As discussed in Section 4.1.3, non-radiological accidents also pose no significant risks to the public. Toxic effects that could result from a liquid propellant spill during fueling operations would not extend beyond the immediate vicinity of the launch pad. Members of the public are excluded from the area at risk during fueling operations. A fuel explosion on the launch pad or during the first few seconds of flight could (if the Atlas V is selected) temporarily increase carbon monoxide (CO), hydrochloric acid (HCl), and aluminum oxide ($Al_2O_3$) levels near the CCAFS boundary. One-hour average concentrations of hazardous emissions from such an explosion are less than the emergency response guidelines recommended by the American Industrial Hygiene Association and the National Research Council for the Department of Defense (USAF 1998).

Thus, implementation of the Proposed Action or the Alternatives would pose no significant radiological or non-radiological risks to the public, including minority and low-income groups within the potentially affected population.

## C.6 REFERENCES FOR APPENDIX C

BEBR 2004. Bureau of Economic and Business Research. *Florida Statistical Abstract 2001.* Warrington College of Business Administration, University of Florida. Gainesville, Florida. 2004.

CEQ 1997. Council on Environmental Quality. *Environmental Guidance under the National Environmental Policy Act*. Executive Office of the President. Washington, DC. December 10, 1997. Available at http://www.Whitehouse.gov/CEQ/.

EDR 2005. Office of Economic and Demographic Research. The Florida Legislature. *Data from the Demographic Estimating Conference Database (Updated March 2005).* Available at http://www.state.fl.us/edr/population.htm.

OMB 2000. Office of Management and Budget. *Guidance on Aggregation and Allocation of Data on Race for Use in Civil Rights Monitoring and Enforcement*, OMB Bulletin No. 00-02. March 9, 2000. Available at http://www.whitehouse.gov/omb/bulletins/b00-02.html.

USBC 1992. U.S. Bureau of the Census. *1990 Census of Population and Housing, Summary Tape File 3 on CD-ROM*. Washington, DC. May 1992.

USBC 1998. U.S. Bureau of the Census. *Landview 4 Software containing Census 1990 Summary File 3 Technical Documentation.* Washington, DC. Updated 1998. Available on CD-ROM at http://www.census.gov.

USBC 2001. U.S. Bureau of the Census. *Census 2000 Summary File 1 Technical Documentation.* Washington, DC. December 2001. Available at http://www.census.gov.

USBC 2003. U.S. Bureau of the Census. *Landview 6 Software containing Census 2000 Summary File 3 Technical Documentation*. Washington, DC. Issued December 2003. Available on CD-ROM at http://www.census.gov.

This page intentionally left blank.